SUSPENSION AND AXLE

TROUBLESHOOTING....SA-2
WHEEL ALIGNMENT....SA-3
FREE WHEELING HUB....SA-6
FRONT AXLE HUB....SA-15
STEERING KNUCKLE AND AXLE SHAFT....SA-23
FRONT DIFFERENTIAL
On-Vehicle Replacement of Rear Oil Seal....SA-33
Removal and Installation of Front Differential....SA-38
Differential Carrier....SA-41
Differential Case (2 Pinion Type)....SA-62
Differential Case (4 Pinion Type)....SA-64
FRONT SUSPENSION
Coil Spring and Shock Absorber....SA-67
Stabilizer Bar....SA-70
Lateral Control Rod....SA-73
Leading Arm....SA-75
REAR AXLE SHAFT
(Semi-Floating Type)....SA-78
REAR AXLE SHAFT AND AXLE HUB
(Full-Floating Type)....SA-84
REAR DIFFERENTIAL
On-Vehicle Replacement of Front Oil Seal....SA-93
Removal and Installation of Rear Differential....SA-97
Differential Carrier....SA-101
Differential Case (2 Pinion Type)....SA-124
Differential Case (4 Pinion Type)....SA-126
Differential Case (Limited Slip Differential)....SA-129
DIFFERENTIAL LOCKING SYSTEM
Description....SA-133
Parts Location and System Diagram....SA-134
Wiring and Connector Diagrams....SA-134
Troubleshooting....SA-135
System Inspection....SA-135
Differential Locking System Circuit....SA-137
Differential Lock Actuator....SA-138
Differential Lock Control Switch....SA-144
Indicator Switch....SA-144
Combination Meter....SA-144
REAR SUSPENSION
Coil Spring and Shock Absorber....SA-146
Lateral Control Rod....SA-151
Upper and Lower Control Arms....SA-153
Stabilizer Bar....SA-156

TROUBLESHOOTING

Problem	Possible cause	Remedy	Page	
			Front	Rear
Wanders/pulls	Tire worn or improperly inflated	Replace tire or inflate tires to proper pressure	A-14	A-14
	Alignment incorrect	Check front wheel alignment	SA-3	—
	Front or rear suspension parts loose or broken	Tighten or replace suspension parts	SA-67	SA-145
	Steering linkage loosen or worn	Tighten or replace steering linkage	SR-71	—
	Steering gear out of adjustment or broken	Adjust or repair steering gear	SR-19, 54	—
Bottoming	Vehicle overloaded	Check loading		
	Shock absorber worn out	Replace shock absorber	SA-67	SA-145
	Spring weak	Replace spring	SA-67	SA-145
Stay/pitches	Tires improperly inflated	Inflated tires to proper pressure	A-14	A-14
	Stabilizer bar bent or broken	Inspect stabilizer bar	SA-67	SA-145
	Shock absorber worn out	Replace shock absorber	SA-67	SA-145
Front wheel shimmy	Tires worn or improperly inflated	Replace tire or inflate tires to proper pressure		—
	Wheels out of balance	Balance wheels		
	Shock absorber worn out	Replace shock absorber	SA-67	—
	Wheel alignment incorrect	Check front wheel alignment	SA-3	—
	Hub bearings worn	Replace hub bearings	SA-15	—
	Steering gear out of adjustment or broken	Adjust or repair steering gear	SR-19, 54	—
Abnormal tire wear	Tires improperly inflated	Inflated tire to proper pressure	A-14	A-14
	Shock absorbers worn out	Replace shock absorber	SA-67	SA-145
	Wheel alignment incorrect	Check wheel alignment	SA-3	—
	Suspension parts worn	Replace suspension parts	SA-67	SA-145
Oil leak from axle	Oil seals worn or damaged	Replace oil seal	SA-23	SA-78, 84
	Bearing retainer loose	Replace retainer	—	SA-78, 84
	Axle housing cracked	Repair as necessary		
Oil leak from pinion shaft	Oil level too high or wrong grade	Drain and replace oil	SA-37	SA-96
	Oil seal worn or damaged	Replace oil seal	SA-33	SA-93
	Companion flange loose or damaged	Tighten or replace bearings	SA-37	SA-96
Noise in axle	Oil level low or wrong grade	Drain and replace oil	SA-37	SA-96
	Excessive backlash between pinion and ring or side gear	Check backlash	SA-41	SA-101
	Ring, pinion or side gears worn or chipped	Inspect gears	SA-41	SA-101
	Pinion shaft bearing worn	Replace bearing	SA-41	SA-101
	Axle shaft bearing worn	Replace bearing	SA-23	SA-78, 84
	Differential bearing loose worn	Tighten or replace bearings	SA-41	SA-101

WHEEL ALIGNMENT

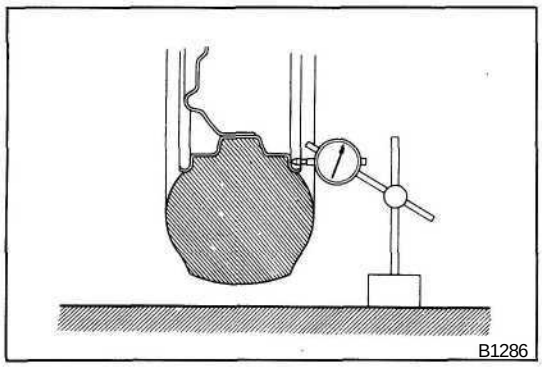

1. MAKE FOLLOW CHECKS AND CORRECT ANY PROBLEMS

(a) Check the tires for wear and proper inflation.

Cold tire inflation pressure: See page A-14

(b) Check the wheel runout.

Lateral runout: 1.2 mm (0.047 in.) or less

(c) Check the front wheel bearings for looseness.

(d) Check the front suspension for looseness.

(e) Check the steering linkage for looseness.

(f) Check that the front absorbers work properly by using the standard bounce test.

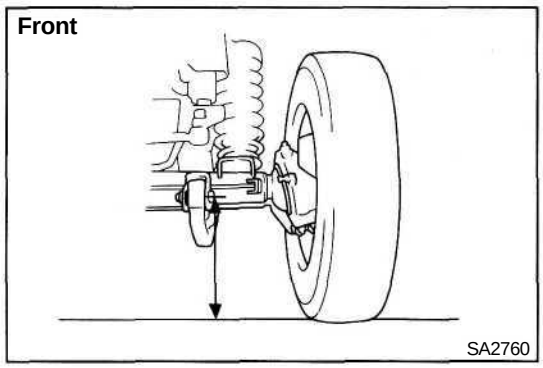

2. MEASURE CHASSIS GROUND CLEARANCE

Chassis ground clearance: See page A-14

If the clearance of the vehicle is not standard, try to level the vehicle by rocking it down.

If still not correct, check for bad springs or suspension parts.

HINT: When measuring the front chassis ground clearance, measure from the ground to the center of the leading arm front mounting bolt.

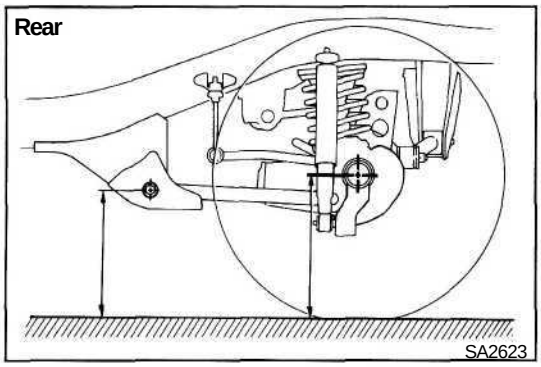

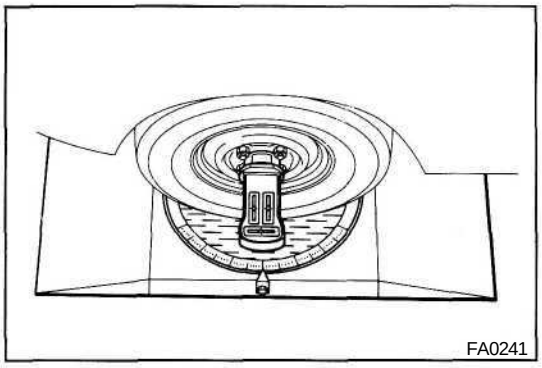

3. INSTALL WHEEL ALIGNMENT EQUIPMENT

Follow the specific instructions of the equipment manufacturer.

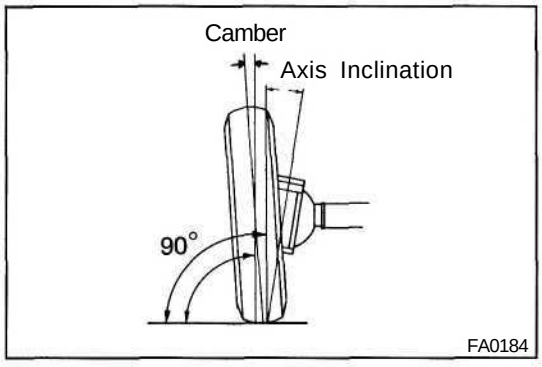

4. CHECK CAMBER AND STEERING AXIS INCLINATION

Camber: 1° ± 45′ (1° ± 0.75°)

Steering axis inclination: 13° ± 45′ (13° ± 0.75°)

If the steering axis inclination is not as specified after camber have been correctly adjusted, recheck the steering knuckle and front wheel for bending or looseness.

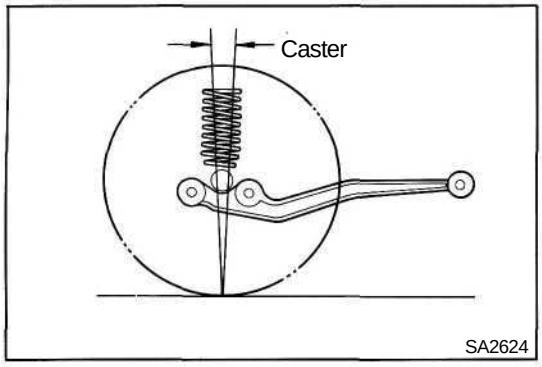

5. **CHECK CASTER**

Tire size	Caster
31 X 10.5OR15 - 6PRLT 265/75R15 9.00 - 15 - 6PRLT	1 °40' ± 60' (1.67° ± 1 °)
Other	3°00' ± 60' (3° ± 1°)

If caster is not as specified, inspect and replace damaged or worn parts.

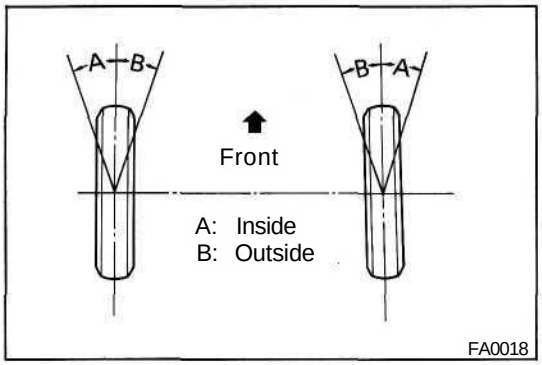

6. ADJUST WHEEL ANGLE

Remove the caps of the knuckle stopper bolts and check the steering angles.

Wheel Angle			
Steering Type		PS	MS
Max.	Inside Wheel	35° +0° −3°	32° +0° −3°
	Outside Wheel	31°	29°

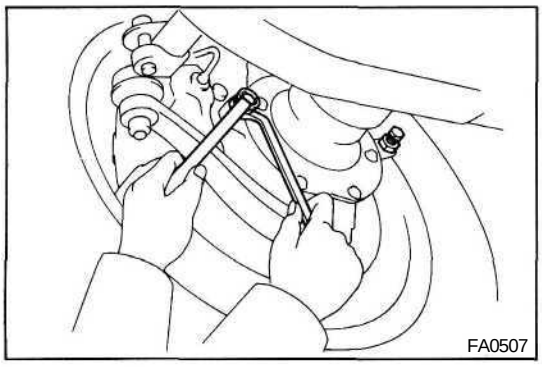

HINT: When the steering wheel is fully turned, make sure that the wheel is not touching the body or brake flexible hose.

If maximum steering angles differ from standard value, adjust the wheel angle with the knuckle stopper bolts.

Torque: 450 kg-cm (33 ft-lb, 44 N·m)

If the wheel angle still cannot be adjusted within limits, inspect and replace damaged or worn steering parts.

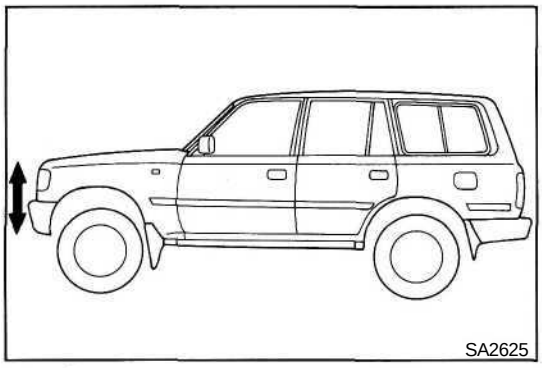

7. ADJUST TOE-IN

Adjust toe-in with a toe-in gauge in the following procedure.

(a) Rock the vehicle up and down to stabilize the suspension.

(b) Move the vehicle forward about 5 m (16.4 ft) with the front wheel in the straight-ahead position on the level place.

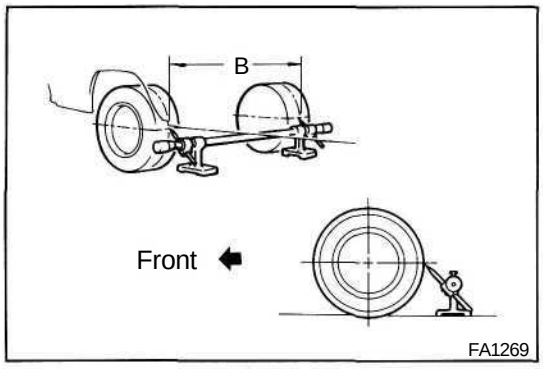

(c) Mark the center of each rear tread and measure the distance "B" between the marks of the right and left tires.

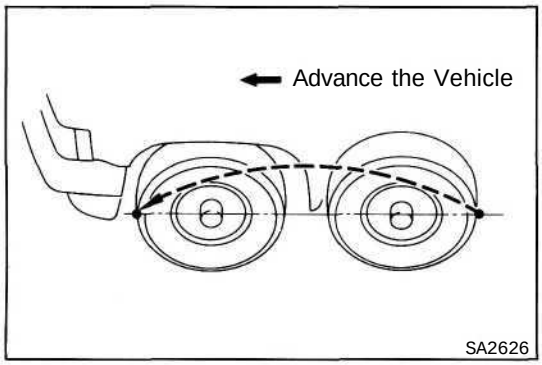

(d) Advance the vehicle until the marks on the rear sides of the tires come to the measuring heights of the gauge on the front side.

HINT: If the tire rolls too far, repeat from step (b).

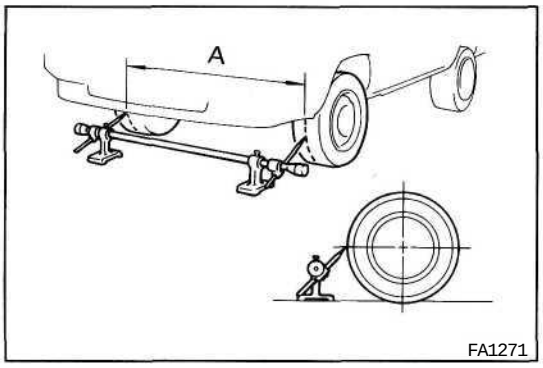

(e) Measure the distance "A" between the marks on the front of the tires.

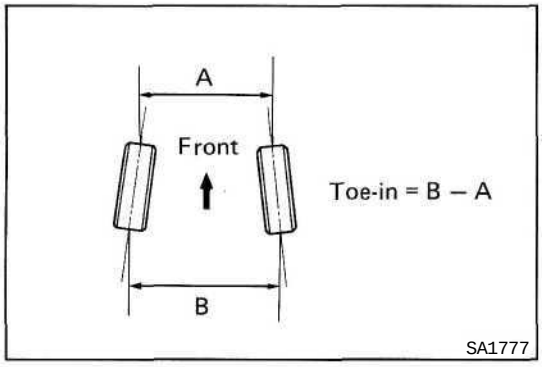

(f) Measure the toe-in.

Toe-in = B - A

Inspection standard: See page A-14

If toe-in is not specification, adjust by left and right tie rods.

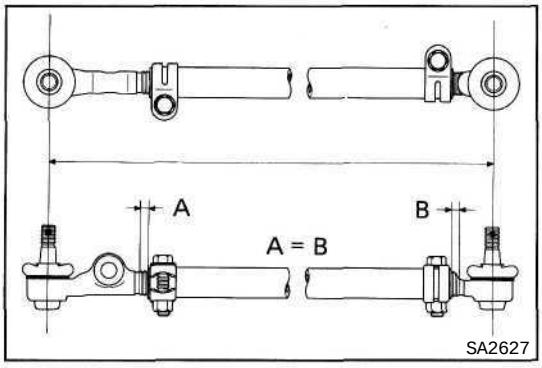

(g) Loosen the clamp bolts and nuts.

(h) Adjust toe-in by turning the left and right tie rod tubes an equal amount.

Adjustment standard: See page A-14

(i) Torque the tie rod, clamp bolts.

Torque: 375 kg-cm (27 ft-lb, 37 N·m)

HINT: Insure that the lenghts of the tie rod ends are the same.

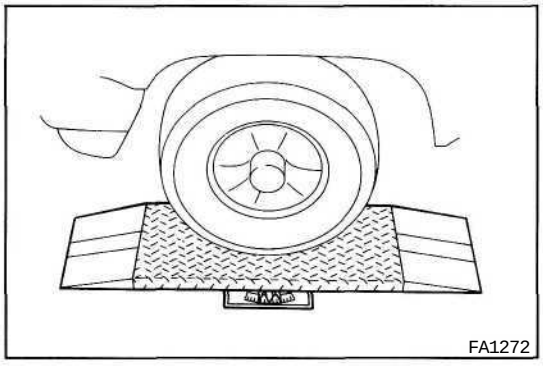

8. INSPECT SIDE SLIP (REFERENCE ONLY)

Side slip: 3.0 mm/m (0.118 in./3.3 ft) or less

FREE WHEELING HUB

COMPONENTS

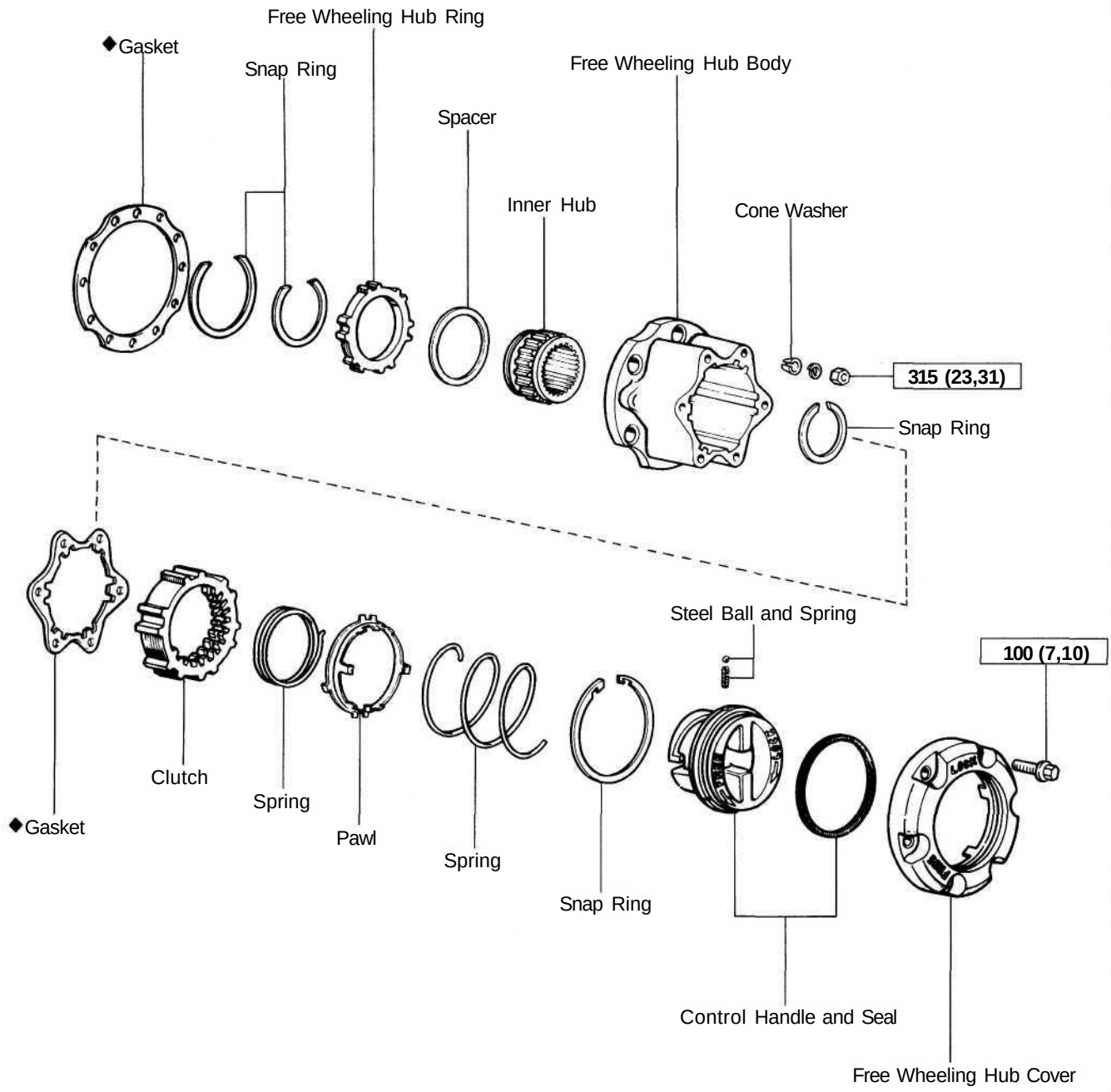

kg-cm (ft-lb, N-m) : Specified torque

◆ Non-reusable part

SA2906

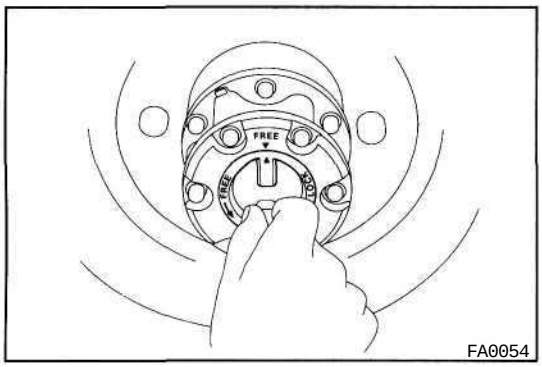

FA0054

REMOVAL OF FREE WHEELING HUB

(See page SA-6)

1. REMOVE FREE WHEELING HUB COVER

(a) Set the control handle to FREE.

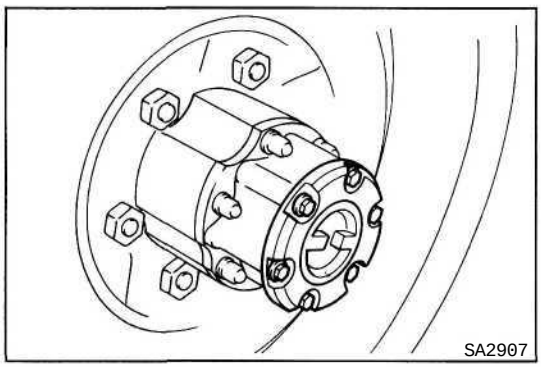
SA2907

(b) Remove the six cover mounting bolts and pull off the cover.

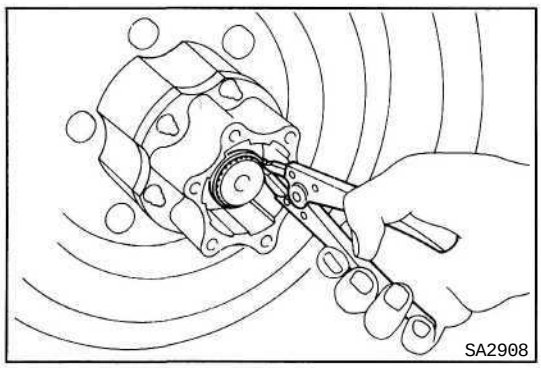
SA2908

2. REMOVE SNAP RING

Using snap ring pliers, remove the snap ring.

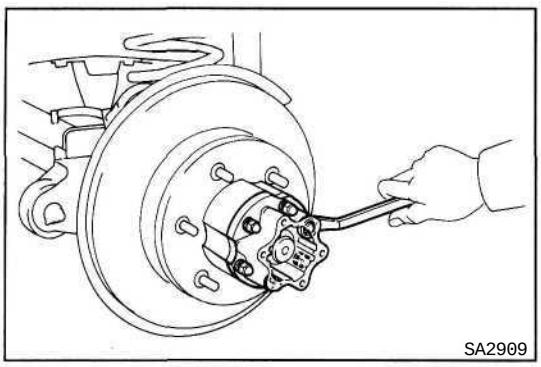
SA2909

3. REMOVE FREE WHEELING HUB BODY

(a) Remove the six mounting nuts and washers.

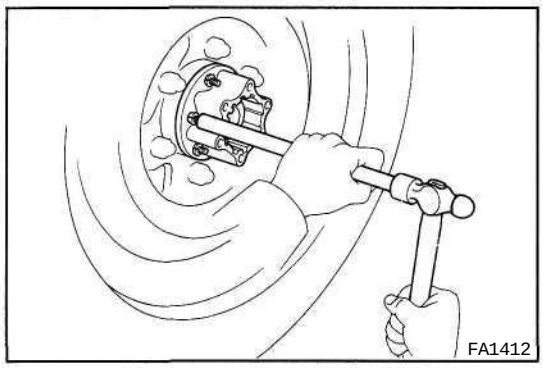
FA1412

(b) Using a brass bar and hammer, tap on the bolts head and remove the six cone washers.

(c) Pull off the free wheeling hub body.

DISASSEMBLY OF FREE WHEELING HUB

(See page SA-6)

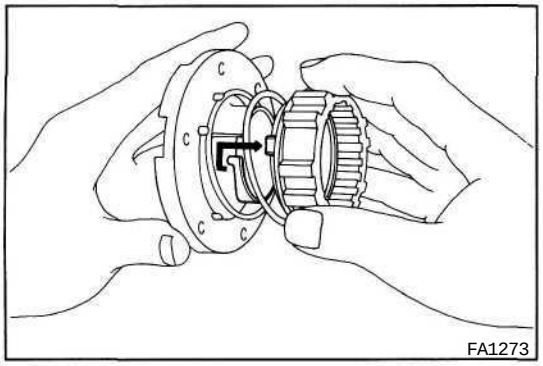
FA1273

1. REMOVE CONTROL HANDLE FROM FREE WHEELING HUB COVER

(a) Compressing the spring, remove the pawl tab from the handle cam, and remove the clutch.

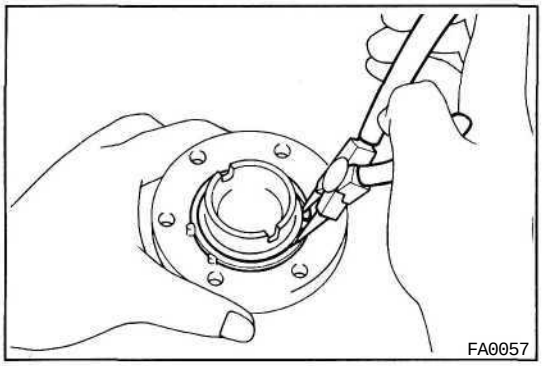
FA0057

(b) Using snap ring pliers, remove the snap ring from the free wheeling hub cover.

(c) Remove the control handle from the free wheeling hub cover.

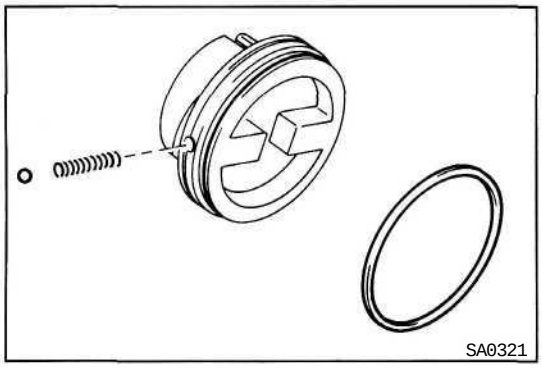
SA0321

(d) Remove the steel ball and spring from the control handle.

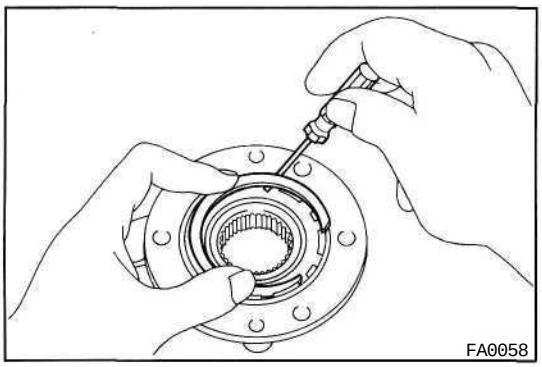
FA0058

2. REMOVE INNER HUB AND FREE WHEELING HUB RING FROM FREE WHEELING HUB BODY

(a) Using a screwdriver, remove the snap ring from the free wheeling hub body.

(b) Remove the inner hub and free wheeling hub ring.

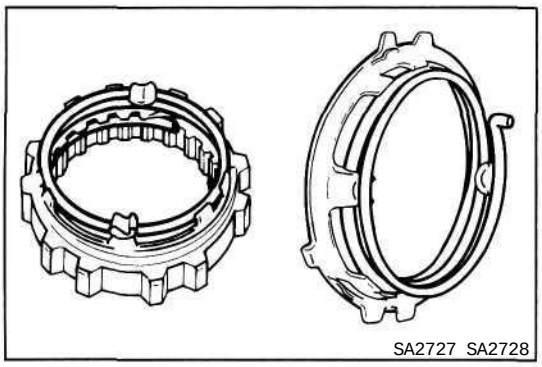
SA2727 SA2728

3. REMOVE PAWL FROM FREE WHEELING HUB CLUTCH

(a) Remove the pawl with the spring from the clutch.

(b) Remove the spring from the pawl.

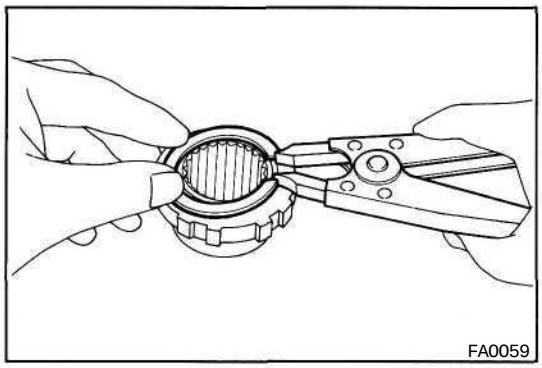

4. REMOVE FREE WHEELING HUB RING FROM INNER HUB

(a) Using snap ring pliers, remove the snap ring from the inner hub.

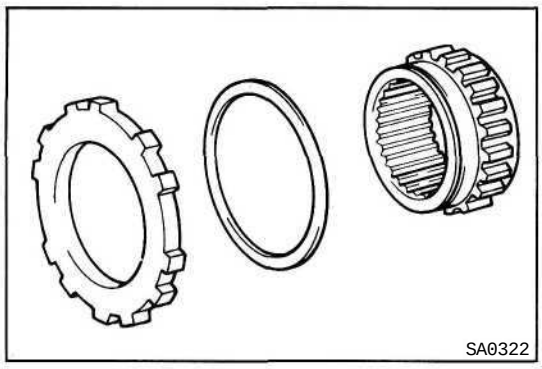

(b) Remove the free wheeling hub ring and spacer from the inner hub.

INSPECTION OF FREE WHEELING HUB

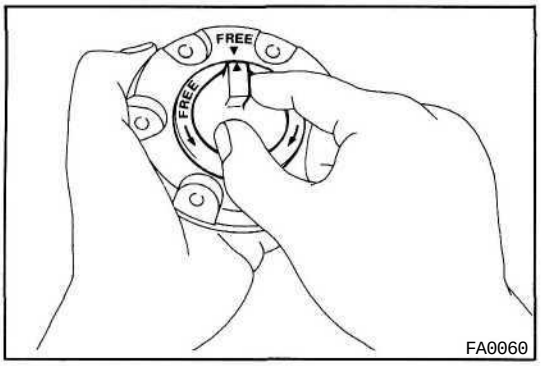

1. INSPECT COVER, HANDLE AND SEAL

Temporarily install the handle in the cover and check that the handle moves smoothly and freely.

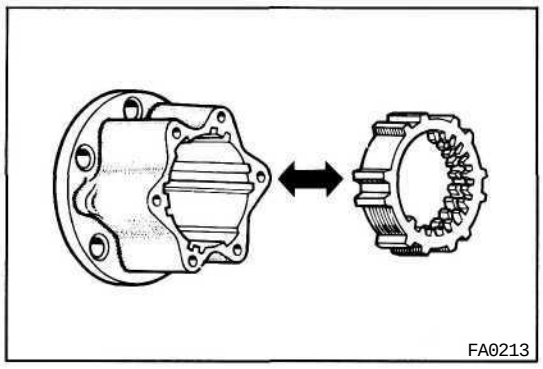

2. INSPECT BODY AND CLUTCH

Check that the clutch moves smoothly in the body.

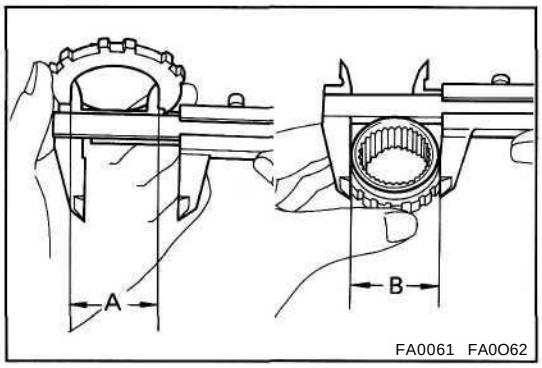

3. MEASURE OIL CLEARANCE BETWEEN INNER HUB AND FREE WHEELING HUB RING

Oil clearance: (A - B): 0.3 mm (0.012 in.)

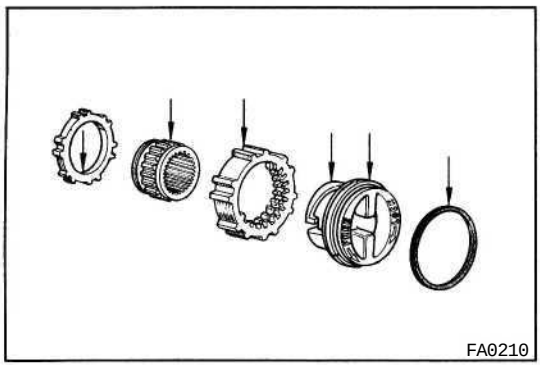

ASSEMBLY OF FREE WHEELING HUB

(See page **SA-6)**

1. APPLY MP GREASE TO SLIDING SURFACE OF PARTS

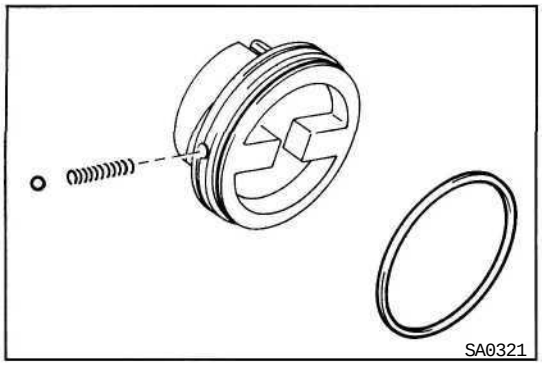

2. INSTALL CONTROL HANDLE TO COVER

(a) Install the seal, spring and steel ball to the handle.

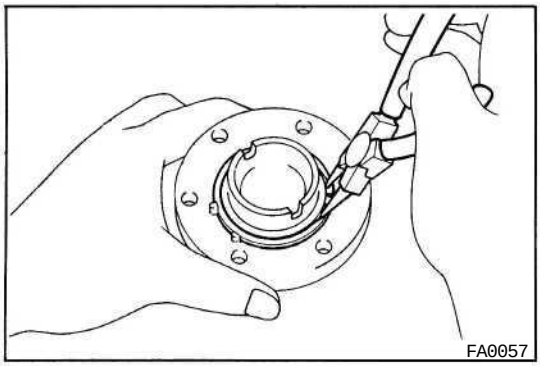

(b) Insert the handle to the cover.

(c) Using snap ring pliers, install the snap ring to the cover.

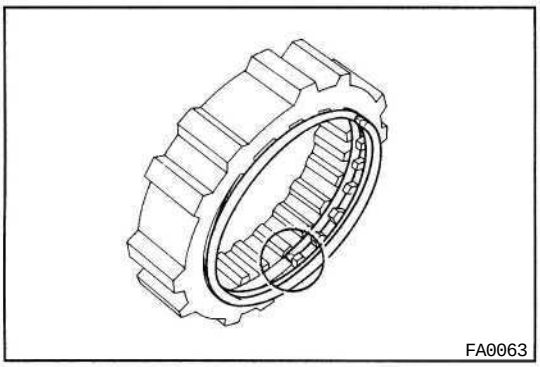

3. INSTALL TENSION SPRING ON CLUTCH

Install the tension spring to the clutch with the spring end aligned with the initial groove.

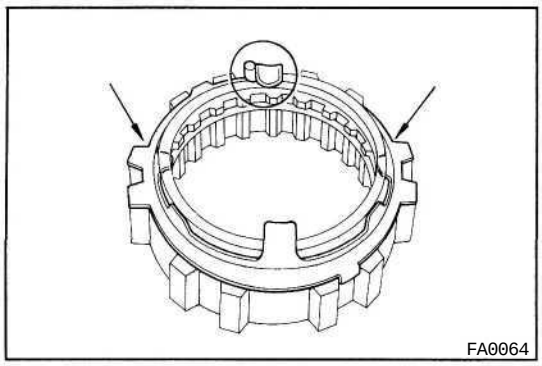

4. INSTALL FOLLOWER PAWL TO CLUTCH

(a) Place the follower pawl on the tension spring with one of the large tabs against the bent spring end.

(b) Place the top ring of the spring on the small tabs.

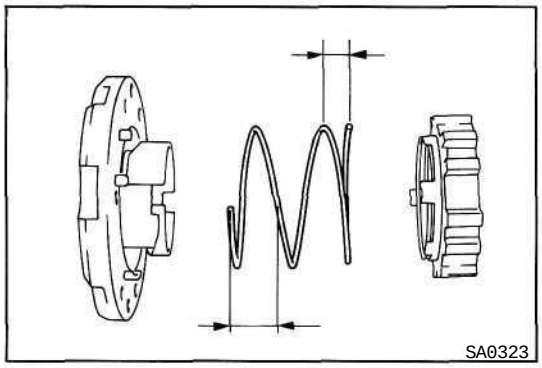

5. INSTALL CLUTCH AND SPRING INTO COVER

(a) Place the spring between the cover and clutch with the large spring end toward the cover.

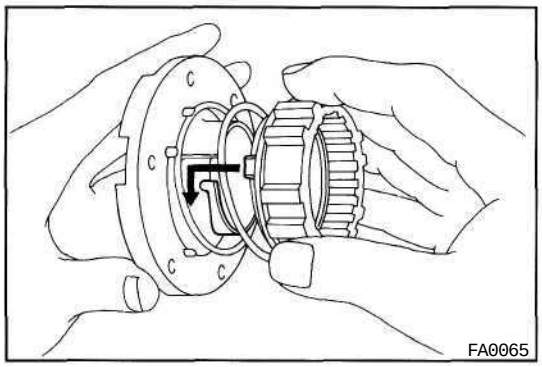

(b) Compress the spring and install the clutch with the pawl tab fit to the handle cam.

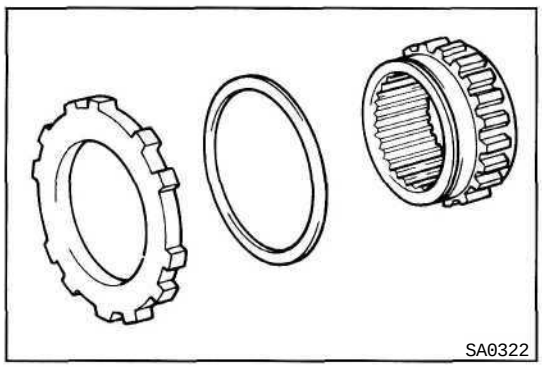

6. INSTALL SPACER AND FREE WHEELING HUB RING TO INNER HUB

(a) Install the spacer and free wheeling hub ring to the inner hub.

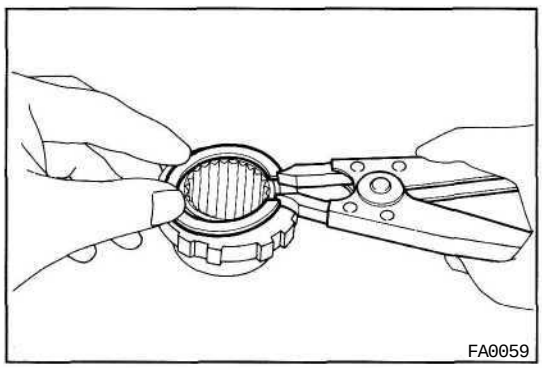

(b) Using snap ring pliers, install the snap ring to the free wheeling hub ring.

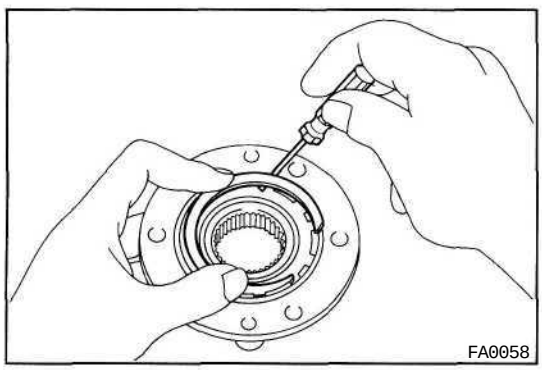

7. INSTALL INNER HUB AND FREE WHEELING HUB RING IN FREE WHEELING HUB BODY

(a) Insert the inner hub and hub ring to the body.

(b) Using a screwdriver, install the snap ring.

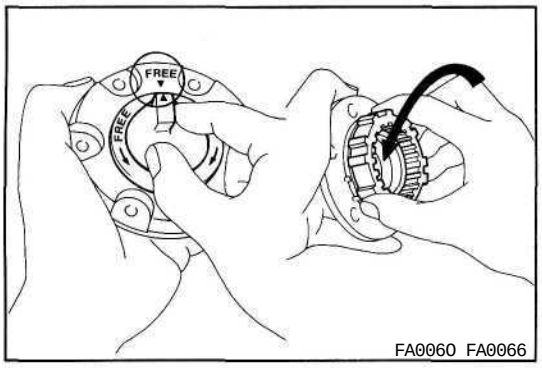

8. TEMPORARILY INSTALL COVER TO BODY AND CHECK FREE WHEELING HUB

(a) Set the control handle and clutch to the FREE position.

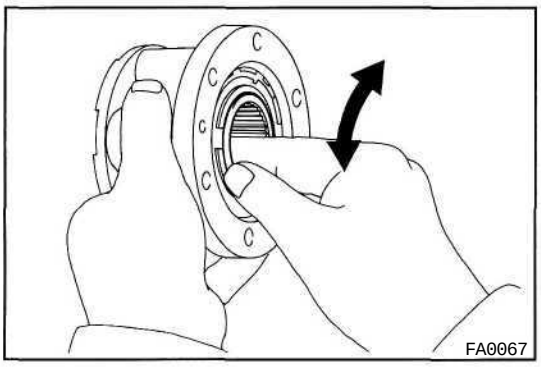

(b) Insert the cover to the body and verify that the hub turns smoothly.

(c) Remove the cover from the body.

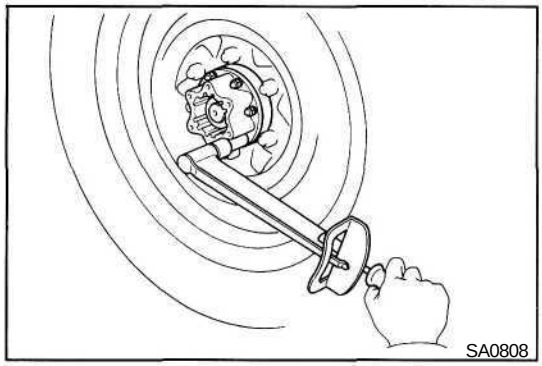

INSTALLATION OF FREE WHEELING HUB

(See page SA-6)

1. INSTALL FREE WHEELING HUB BODY

(a) Place a new gasket in position on the front axle hub.

(b) Install the free wheeling hub body with six cone washers, washers and nuts. Torque the nuts.

Torque: 315 kg-cm (23 ft-lb, 31 N·m)

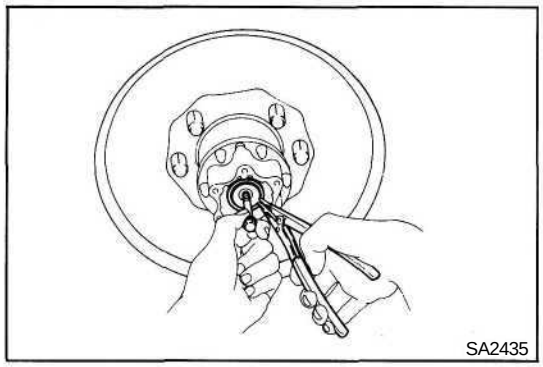

2. INSTALL SNAP RING

(a) Install a bolt to the axle shaft and pull it out.

(b) Using snap ring pliers, install the snap ring.

(c) Remove the bolt.

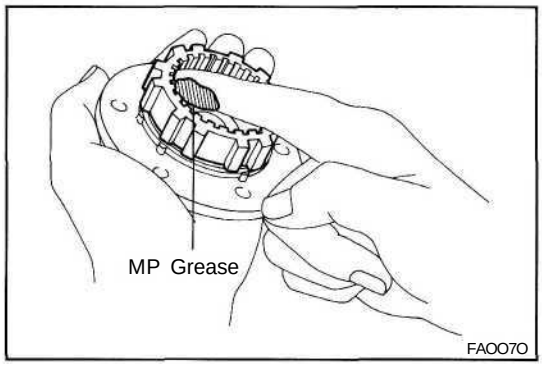

3. APPLY MP GREASE TO INNER HUB SPLINES

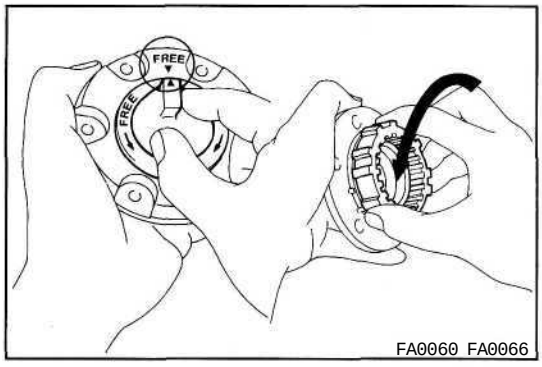

4. INSTALL FREE WHEELING HUB COVER WITH NEW GASKET

(a) Set the control handle and clutch to the FREE position.

(b) Place a new gasket in position on the cover.

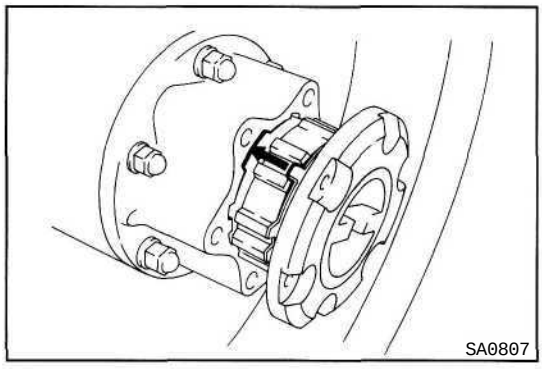

(c) Install the cover to the body with the follower pawl tabs aligned with the non-toothed portions of the body.

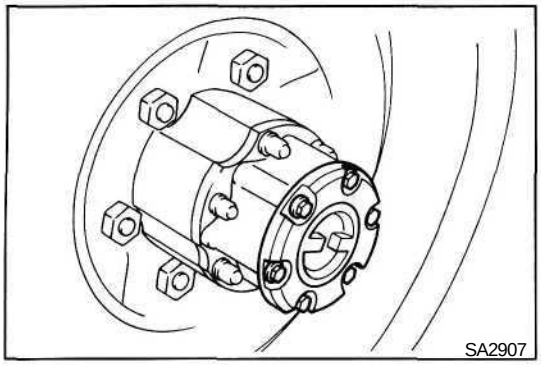

(c) Install and torque the six cover mounting bolts.
Torque: 100 kg-cm (7 ft-lb, 10 N·m)

FRONT AXLE HUB

COMPONENTS

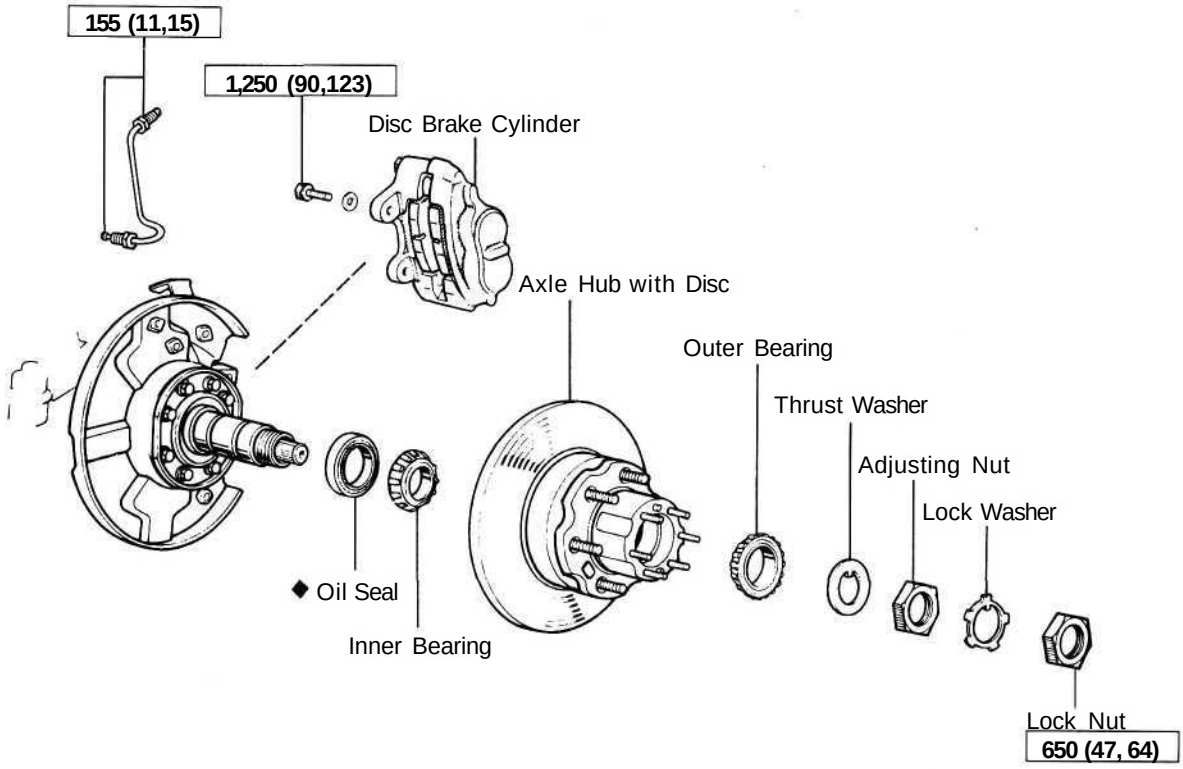

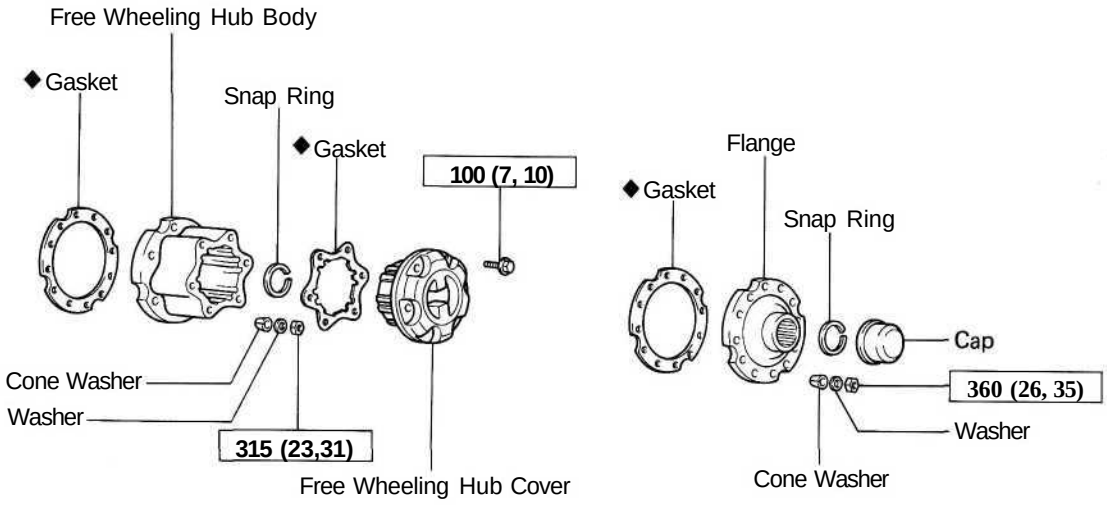

kg-cm (ft-lb, N-m) : Specified torque

◆ Non-reusable part

SA2628
SA2729

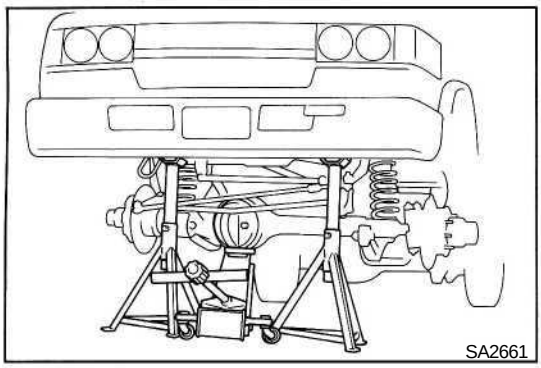

DISASSEMBLY OF FRONT AXLE HUB

(See page SA-15)

1. JACK UP AND SUPPORT VEHICLE WITH FRAME

Jack up and support the frame on stands.

2. REMOVE FRONT WHEEL

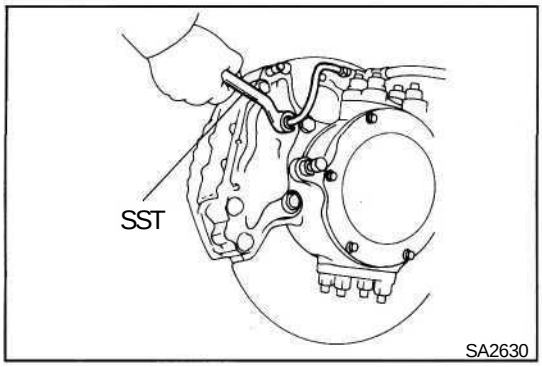

3. REMOVE DISC BRAKE CYLINDER

(a) Using SST, disconnect the brake tube.

SST 09751-36011

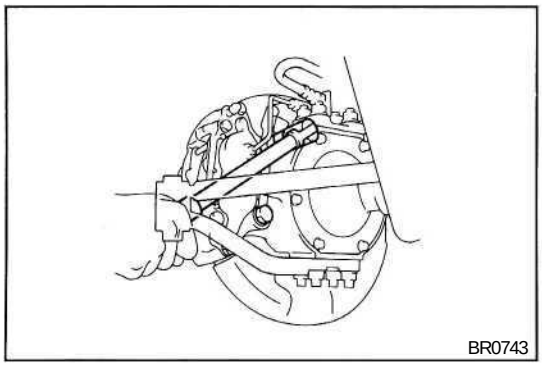

(b) Remove two bolts and brake cylinder.

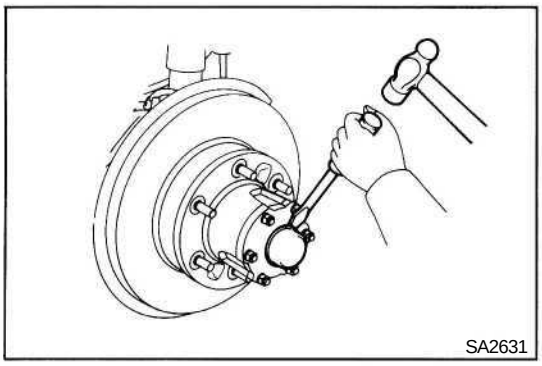

4. (w/ FREE WHEELING HUB)
REMOVE FREE WHEELING HUB

HINT: If the vehicle has the free wheeling hub, see page SA-6.

5. (w/o FREE WHEELING HUB)
REMOVE FLANGE

(a) Using a screwdriver and hammer, remove the cap from the flange.

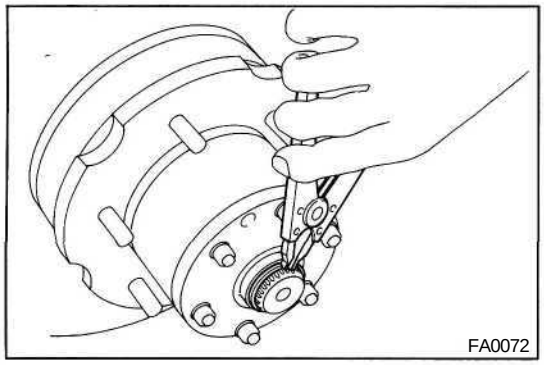

(b) Using snap ring pliers, remove the snap ring.

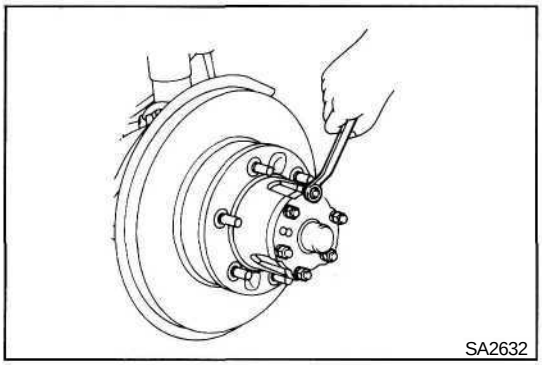

(c) Remove the six mounting nuts and washers.

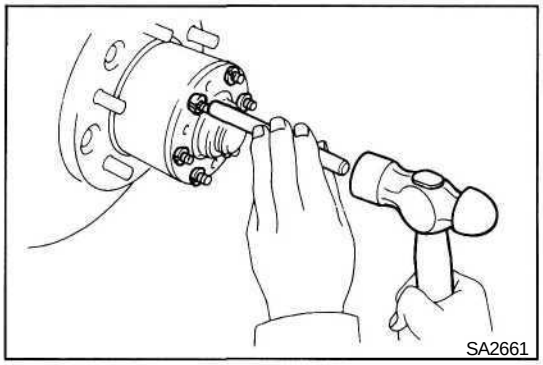

(d) Using a brass bar and hammer, drive the bolt heads and remove the cone washers.

(e) Pull out the flange.

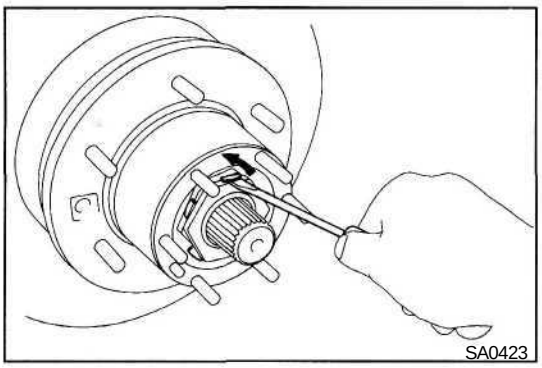

6. REMOVE AXLE HUB WITH DISC

(a) Using a screwdriver, release the lock washer.

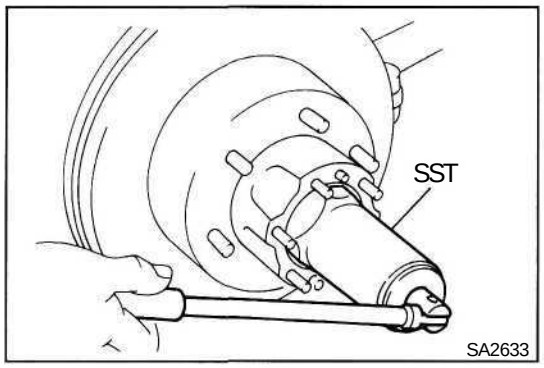

(b) Using SST, remove the lock nut.

SST 09607-60020

(c) Remove the lock washer.

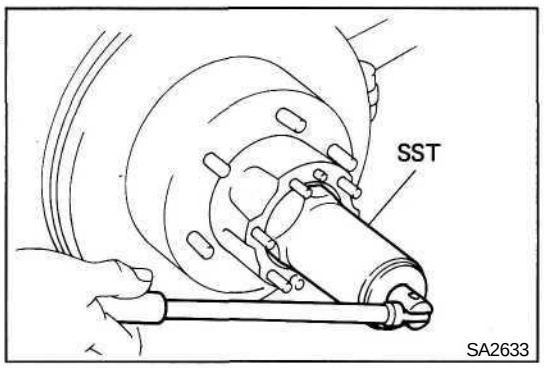

(d) Using SST, remove the adjusting nut.

SST 09607-60020

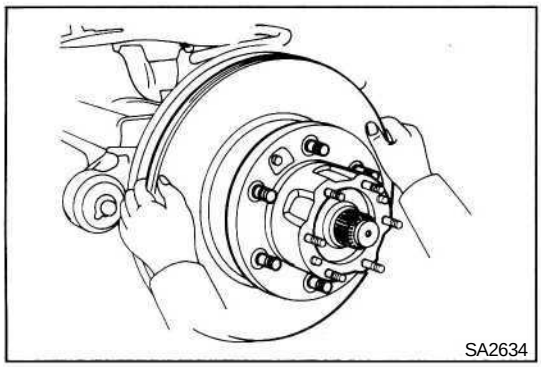

(e) Remove the axle hub with the disc.

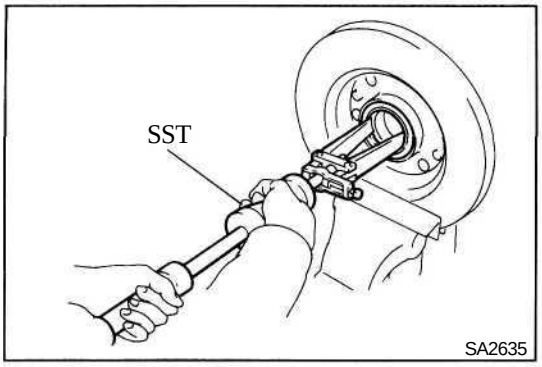

7. REMOVE INNER BEARING AND OIL SEAL

(a) Using SST, remove the oil seal.

SST 09308-00010

(b) Remove the inner bearing from the axle hub.

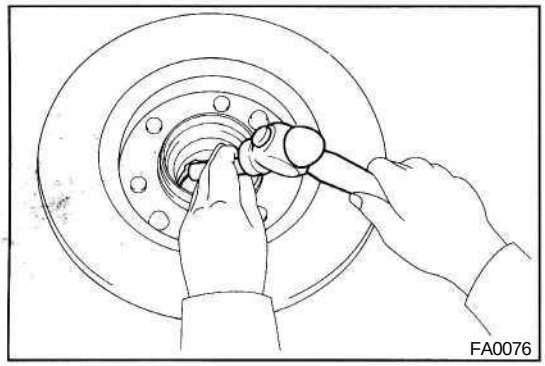

INSPECTION AND REPAIR OF FRONT AXLE HUB

1. INSPECT BEARING

Clean the bearings and outer races and inspect them for wear or damage.

2. REPLACE BEARING OUTER RACE

(a) Using a brass bar and hammer, drive out the bearing outer race.

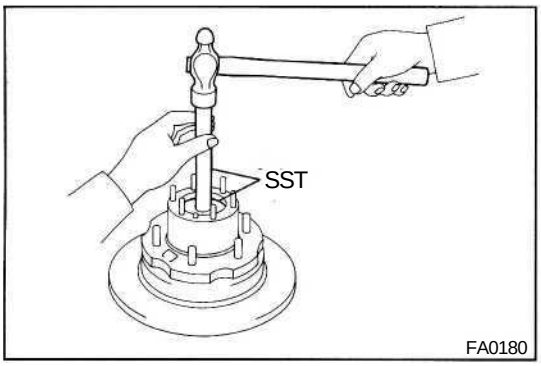

(b) Using SST, carefully drive in a new bearing outer race.

SST 09608-35014
Inner Bearing (09608-06020, 09608-06210)
Outer Bearing (09608-06020, 09608-06200)

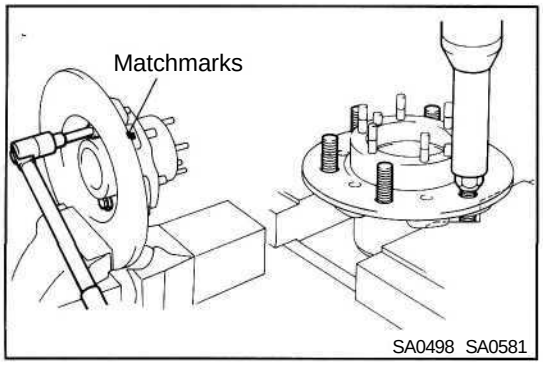

3. REPLACE HUB BOLTS

(a) Place matchmarks on the axle hub and rotor disc.

(b) Remove the six bolts and rotor disc from the axle hub.

(c) Install the nut to the hub bolts.

(d) Using an extension bar and press, press out the hub bolts.

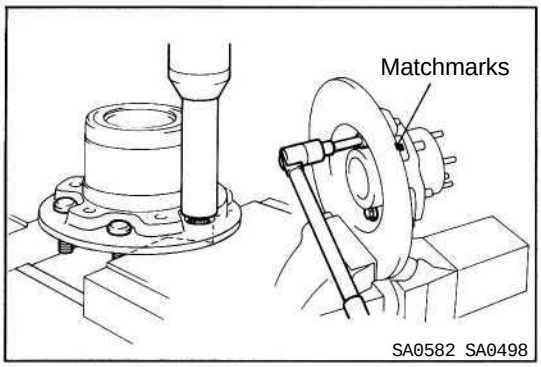

(e) Using an extension bar and press, press in the hub bolts.

(f) Align the matchmarks, install the axle hub to the rotor disc.

Torque: 650 kg-cm (47 ft-lb, 64 N-m)

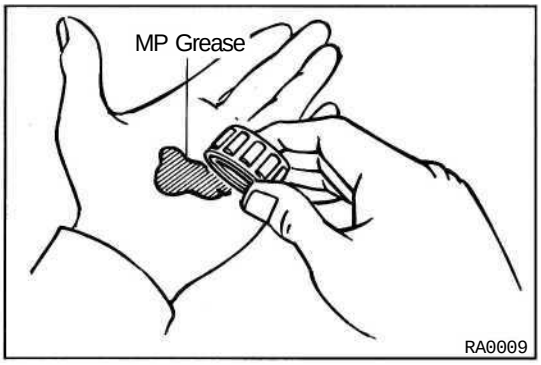

ASSEMBLY OF AXLE HUB

(See page SA-15)

1. PACK BEARINGS WITH MP GREASE

(a) Place MP grease in the palm of your hand.

(b) Pack grease into the bearing, continue until the grease oozes out from the outer side.

(c) Do the same around the bearing circumference.

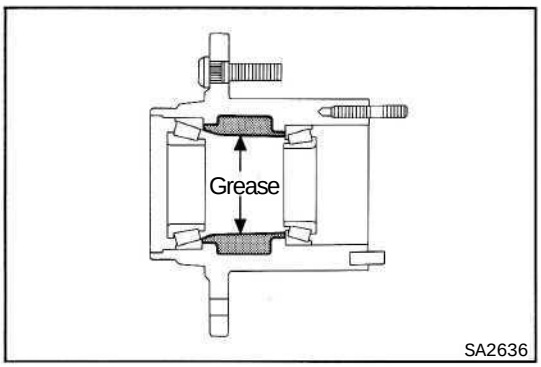

2. PACK INSIDE OF HUB AND CAP WITH MP GREASE

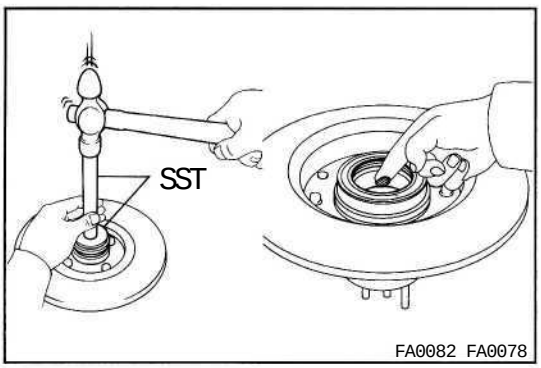

3. INSTALL INNER BEARING AND OIL SEAL

(a) Place inner bearing into the hub.

(b) Using SST, drive in the oil seal into the hub.

SST 09608-35014 (09608-06020, 09608-06150)

(c) Coat the oil seal with MP grease.

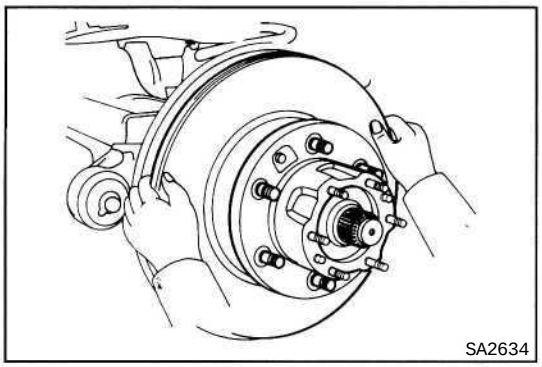

4. INSTALL AXLE HUB ON SPINDLE

(a) Place the axle hub on the spindle.

(b) Install the outer bearing and thrust washer.

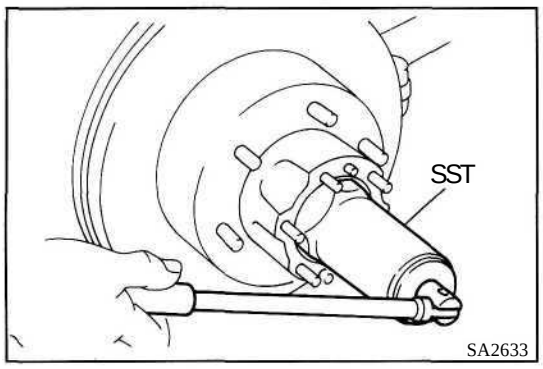

5. ADJUST PRELOAD

(a) Using SST, torque the bearing adjusting nut.

SST 09607-60020

Torque: 600 kg-cm (43 ft-lb, 59 N-m)

(b) Turn the hub right and left two or three times.

(c) Loosen the nut until it can be turned by hand.

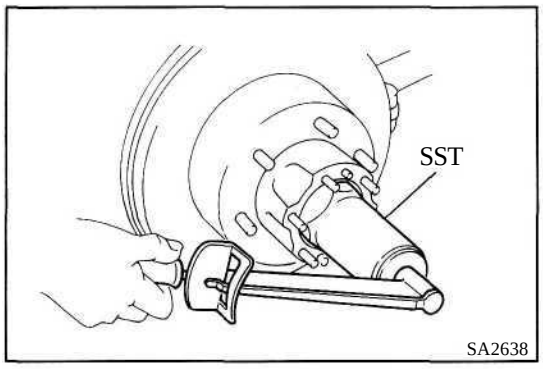

(d) Using SST, retorque the bearing adjusting nut.

SST 09607-60020

Torque: 600 kg-cm **(43 ft-lb, 59 N-m)**

(e) Loosen the nut until it can turned by hand.

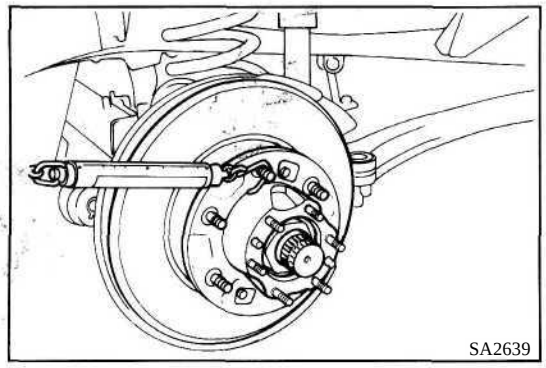

(f) Using a spring tension gauge, measure the frictional force of the oil seal at the hub bolt.

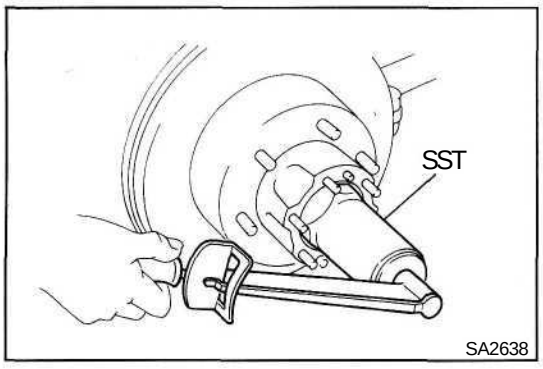

(g) Using SST, retorque the adjusting nut.

SST 09607-60020

Torque: 55 kg-cm (48 in.-lb,5.4 N-m)

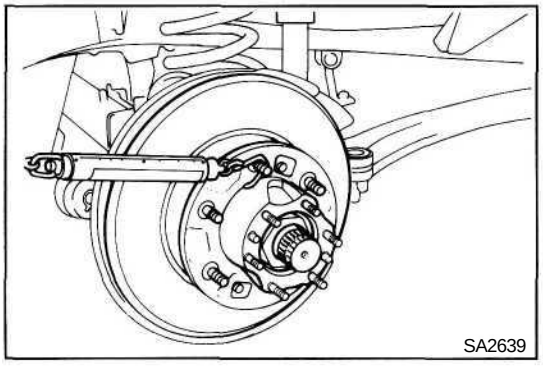

(h) Using a spring tension gauge, measure the preload.

Preload (starting):

Frictional force plus 2.8 — 5.7 kg

(6.2- 12.6lb.27- 56 N)

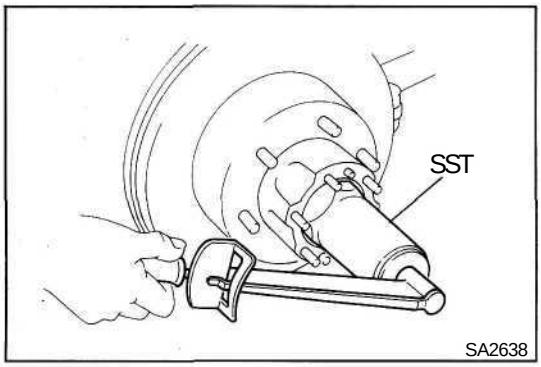

6. INSTALL LOCK WASHER AND LOCK NUT

(a) Install the lock washer and lock nut.

(b) Using SST, torque the lock nut.

SST 09607-60020

Torque: 900 kg-cm (65 ft-lb, 88 N-m)

(c) Check that the bearing has no play.

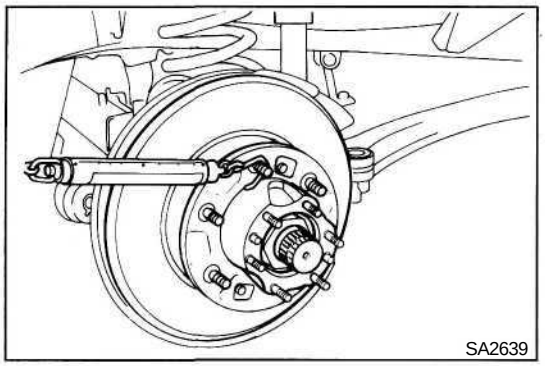

(d) Using a spring tension gauge, check the preload.

Preload (starting):
Frictional force plus 2.8 — 5.7 kg
(6.2 - 12.6 lb, 27 - 56 N)

If not within specification, adjust with the adjusting nut.

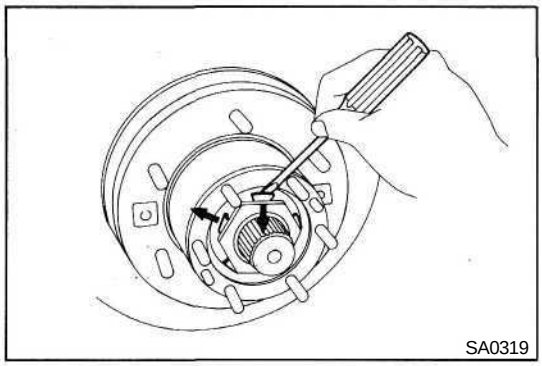

(e) Secure the lock nut by bending one of the lock washer tooth inward and another lock washer tooth outward.

7. (w/ FREE WHEELING HUB)
INSTALL FREE WHEELING HUB
(See page SA-6)

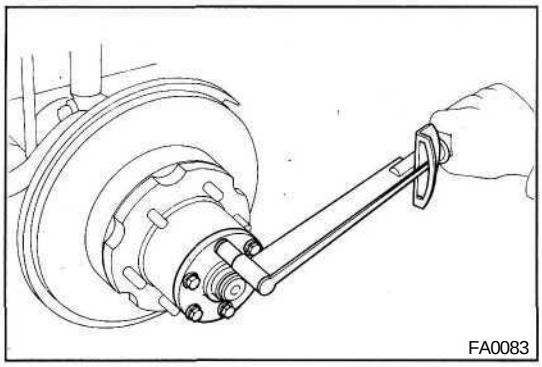

8. (w/o FREE WHEELING HUB)

(a) Place a new gasket in position on the axle hub.

(b) Install the flange to the axle hub.

(c) Install six cone washers, washers and nuts. Torque the nuts.

Torque: 360 kg-cm (26 ft-lb, 35 N-m)

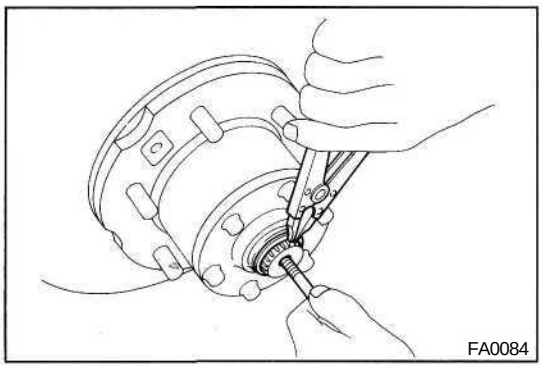

(d) Install a bolt to the axle shaft and pull it out.

(e) Using snap ring pliers, install the snap ring.

(f) Remove the bolt.

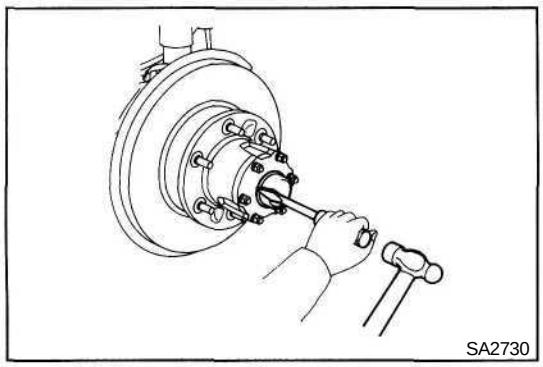

(g) Using a screwdriver and hammer, install the cap to the flange.

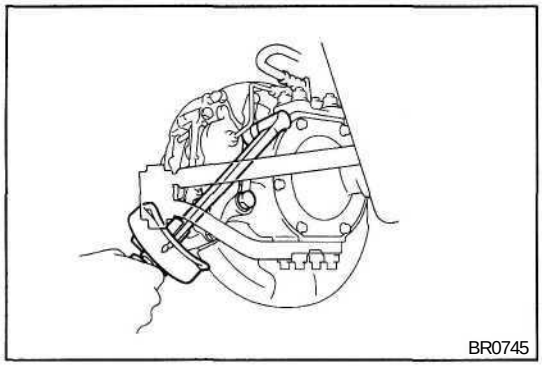

9. INSTALL BRAKE CYLINDER

(a) Install the brake cylinder to the steering knuckle. Torque the mounting bolts.

Torque: 1,250 kg-cm (90 ft-lb, 123 N·m)

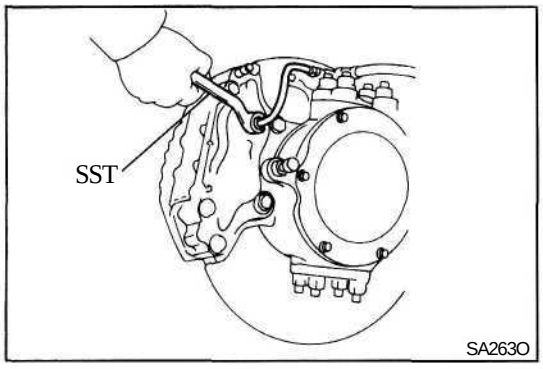

(b) Using SST, connect the brake tube.

SST 09751-36011

Torque: 155 kg-cm (11 ft-lb, 15 N·m)

10. BLEED BRAKE LINE
(See page BR-7)

STEERING KNUCKLE AND AXLE SHAFT

COMPONENTS

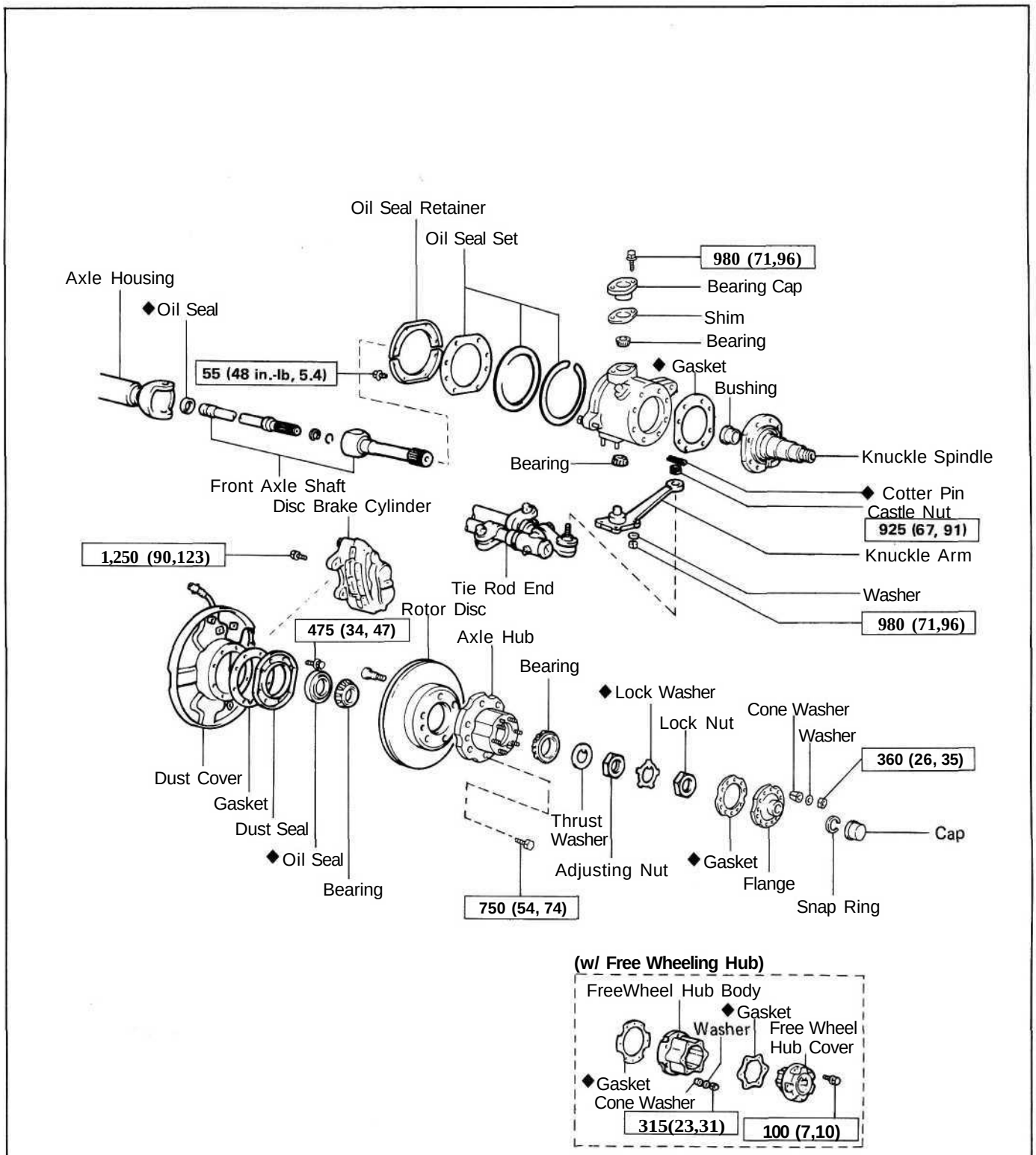

kg-cm (ft-lb, N-m) : Specified torque

◆ Non-reusable part

SA2731

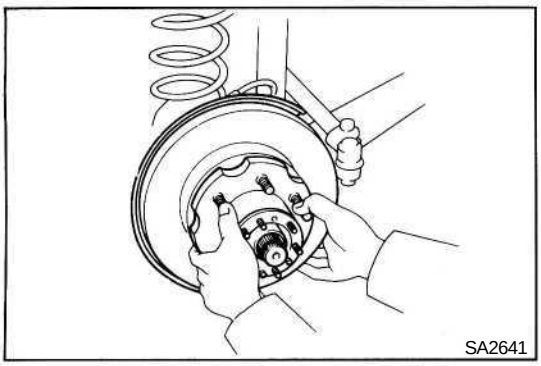

DISASSEMBLY OF STEERING KNUCKLE AND AXLE SHAFT

(See page SA-23)

1. REMOVE FRONT AXLE HUB
(See page SA-15)

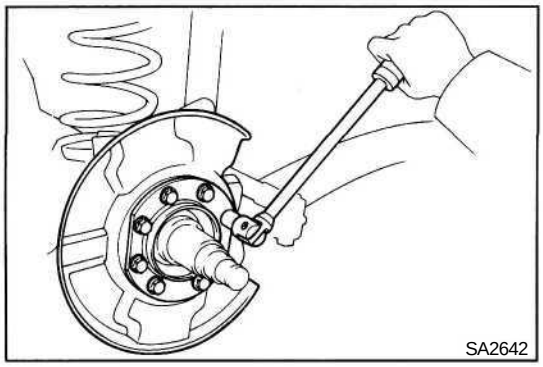

2. REMOVE KNUCKLE SPINDLE MOUNTING BOLTS

3. REMOVE DUST SEAL AND DUST COVER

Remove the eight bolts and the dust seal, dust cover and gasket.

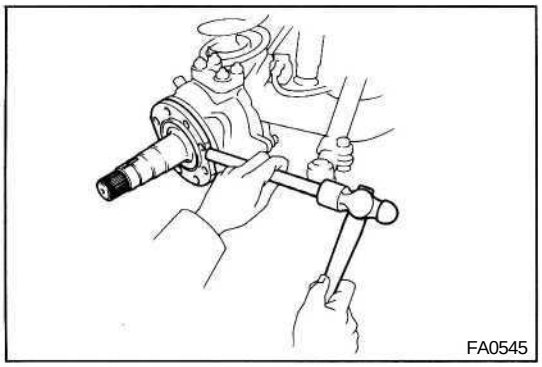

4. REMOVE KNUCKLE SPINDLE

Using a brass bar and hammer, tap the knuckle spindle to the steering knuckle.

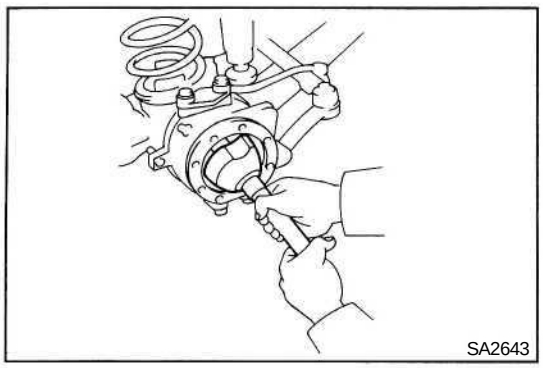

5. REMOVE AXLE SHAFT

Position one flat part of the outer shaft upward and pull out the axle shaft.

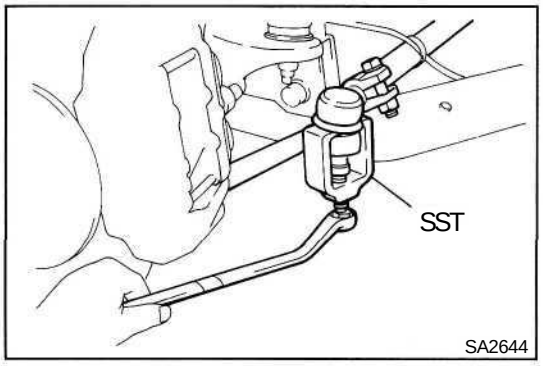

6. DISCONNECT TIE ROD END FROM KNUCKLE ARM

(a) Remove the cotter pin and castle nut.

(b) Using SST, disconnect the tie rod end from the knuckle arm.

SST 09611-22012

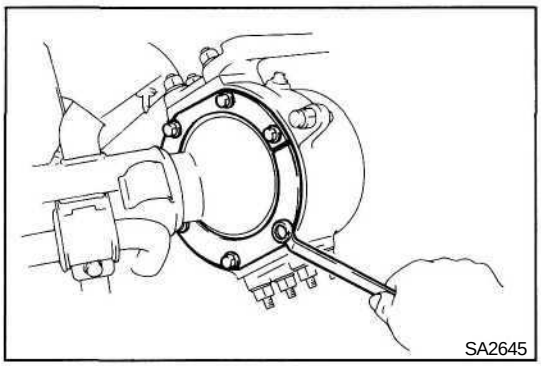

7. REMOVE OIL SEAL END RETAINER

Remove the six bolts and the retainer.

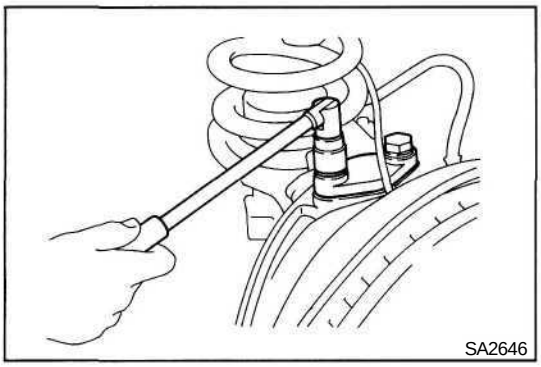

8. REMOVE KNUCKLE ARM AND BEARING CAP

(a) Remove the knuckle and bearing cap mounting nuts.

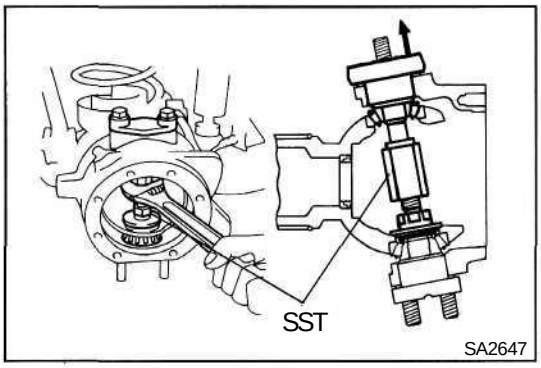

(b) Using SST, push out the bearing cap and shims from the steering knuckle.

SST 09606-60020

HINT: Use the SST without a collar.

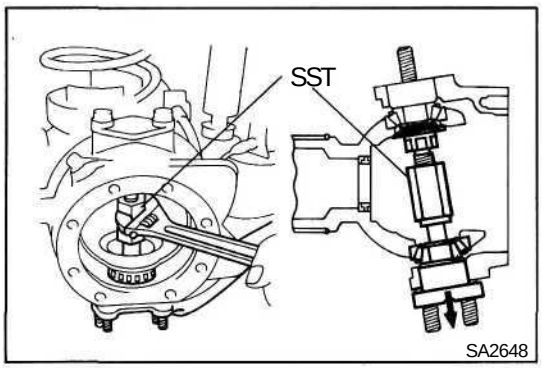

(c) Using SST, push out the knuckle arm from the steering knuckle.

SST 09606-60020

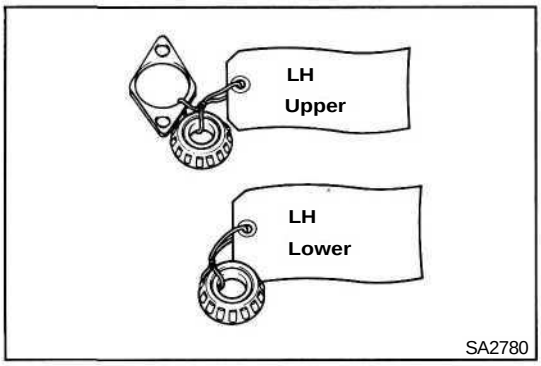

9. REMOVE STEERING KNUCKLE AND BEARING

HINT: Mark the removed adjusting shims and bearings so as to enable reassembling them to their proper positions.

INSPECTION AND REPAIR OF STEERING KNUCKLE AND AXLE SHAFT

1. INSPECT KNUCKLE SPINDLE

Clean the knuckle spindle and inspect the bushing for wear or damage.

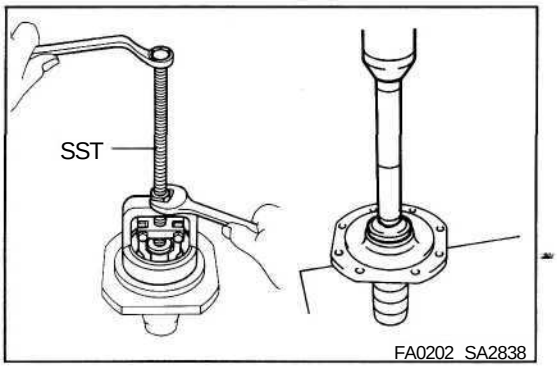

2. REPLACE BUSHING

(a) Using SST, remove the bushing.

SST 09612-65014 (09612-01010, 09612-01050)

(b) Using SST, press a new bushing into the spindle.

SST 09618-60010

3. INSPECT BEARING

Clean the bearings and outer races and inspect them for wear or damage.

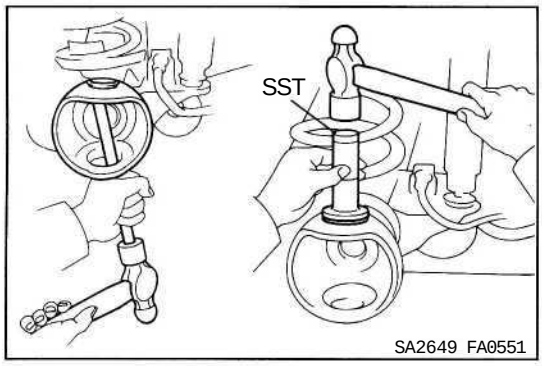

4. IF NECESSARY, REPLACE BEARING OUTER RACE

(a) Using a brass bar, drive out the bearing outer race.

(b) Using SST, carefully drive in a new bearing outer race.

SST 09605-60010

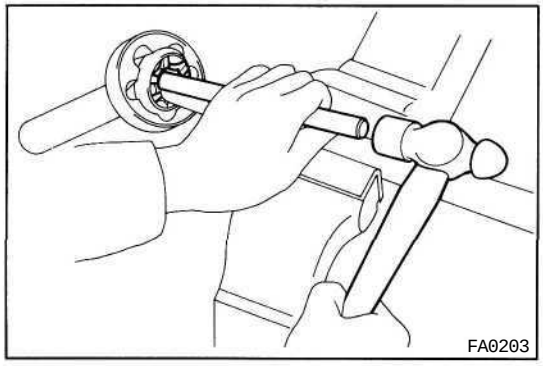

5. INSECT BIRFIELD JOINT INNER PARTS

(a) Hold the inner shaft in a vise.

(b) Place a brass bar against the joint inner race and drive out the outer shaft.

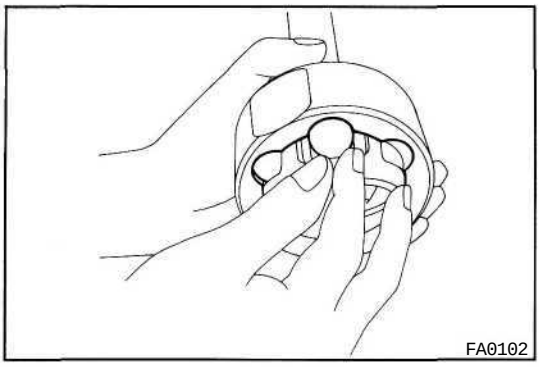

(c) Tilt the inner race and cage and take out the bearing balls one by one.

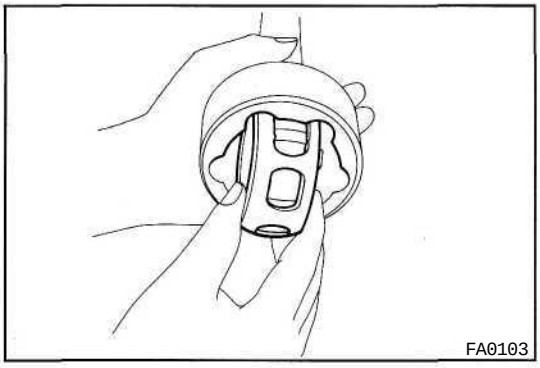

(d) Fit the two large openings in the cage against the protruding parts of the outer shaft, and pull out the cage and inner race.

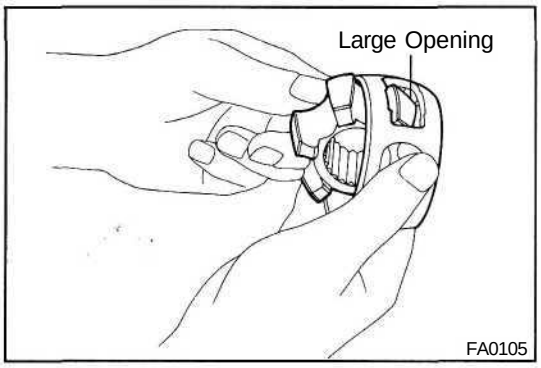

(e) Take out the inner race from the cage through the large opening.

(f) Clean and inspect the joint parts for wear or damage.

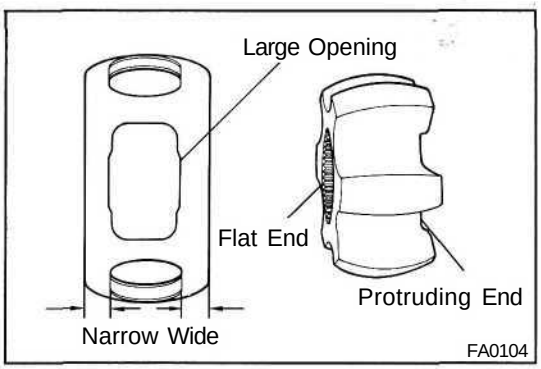

(g) Coat the joint inner parts and outer shaft inside with molybdenum disulphide lithium base grease.

(h) Insert the inner race in the cage through the large opening.

(i) Position the protruding end of the inner race toward the wide side of the cage.

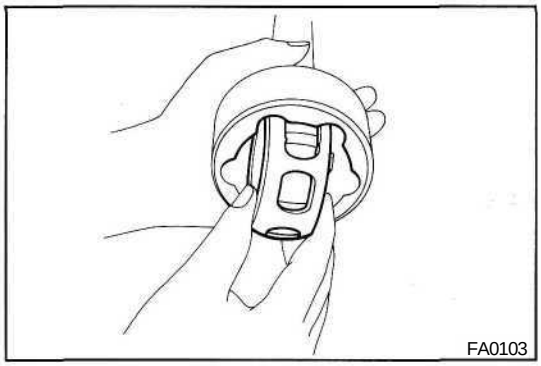

(j) Assemble the cage and inner race to the outer shaft by fitting the two large openings in the cage against the protruding parts of the outer shaft.

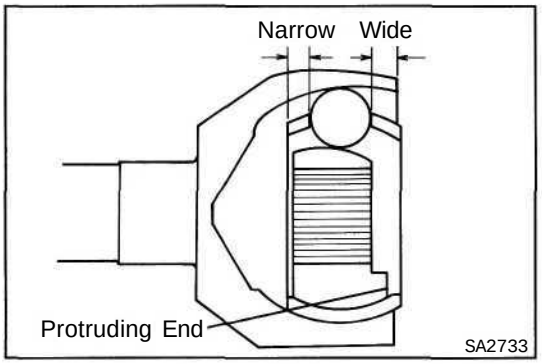

(k) Make sure to position the wide side of the cage and the inner race protruding end outward.

(l) Fit in the inner race and cage, and install the six bearing balls in the outer shaft. (See step (c))

(m) Pack molybdenum disulphide lithium base grease in the outer shaft.

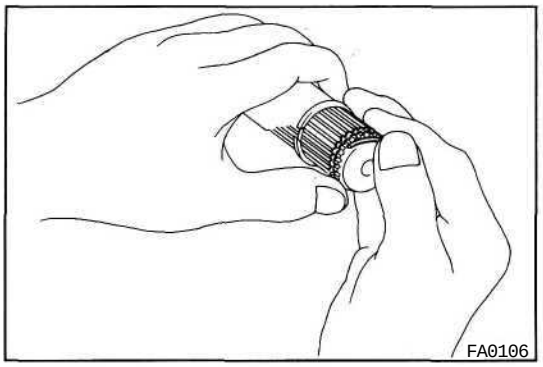

(n) Install new snap rings to the inner shaft.

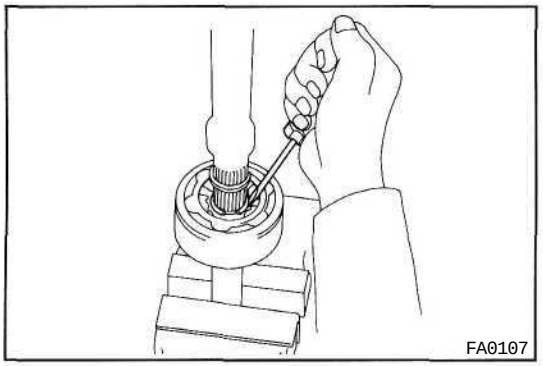

(o) Hold the outer shaft in a vise and, while compressing the snap inner ring, install the inner shaft to the outer shaft.

(p) Verify that the inner shaft cannot be pulled out.

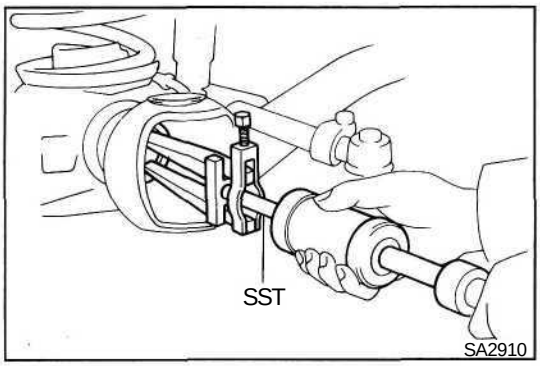

REPLACEMENT OF DRIVE SHAFT OIL SEAL

1. REMOVE DRIVE SHAFT OIL SEAL

Using SST, remove the oil seal from the axle housing.

SST 09308-00010

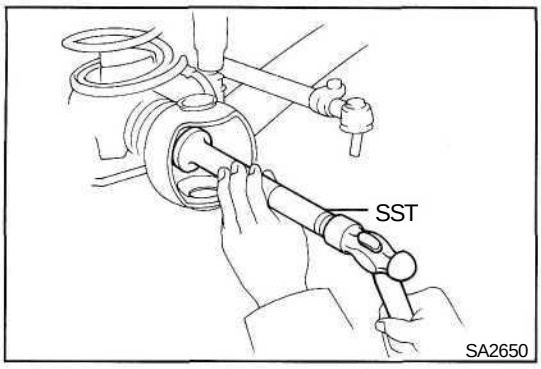

2. INSTALL DRIVE SHAFT OIL SEAL

Using SST, drive in the oil seal into the axle housing.

SST 09618-60010

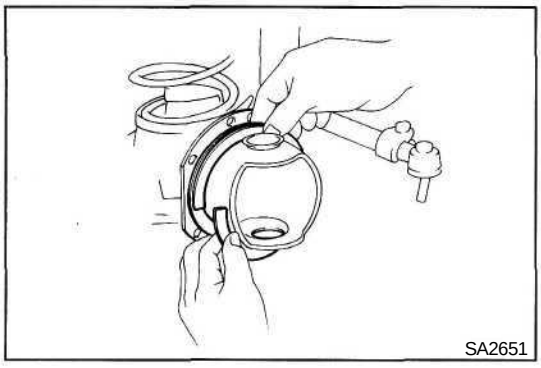

ASSEMBLY OF STEERING KNUCKLE AND AXLE SHAFT

(See page SA-23)

1. INSTALL OIL SEAL SET END RETAINER

Install the parts in the following order:

(a) Felt dust seal

(b) Rubber seal

(c) Steel ring

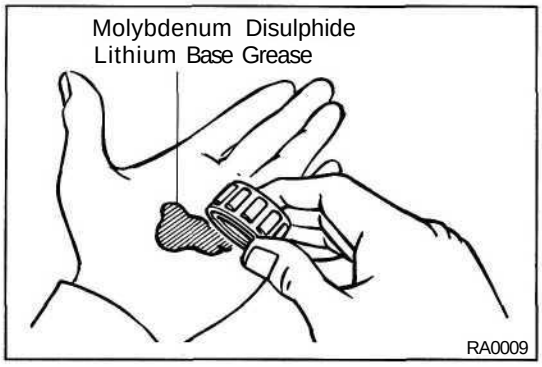

2. PACK BEARINGS WITH MOLYBDENUM DISULPHIDE LITHIUM BASE GREASE

(a) Place molybdenum disulphide lithium base grease in the palm of your hand.

(b) Pack grease into the bearing, continuing until the grease oozes out from the other side.

(c) Do the same around the bearing circumference.

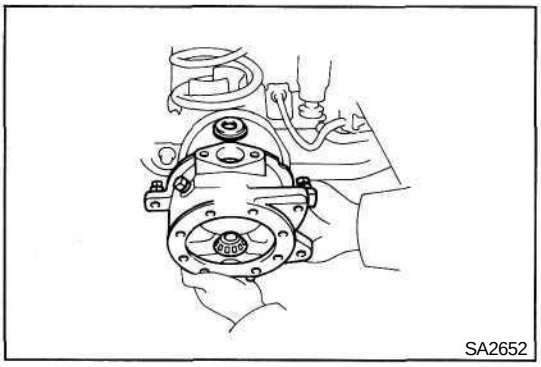

3. INSTALL STEERING KNUCKLE AND BEARINGS

(a) Place the bearings in positions on the knuckle and axle housing.

(b) Insert the knuckle on the axle housing.

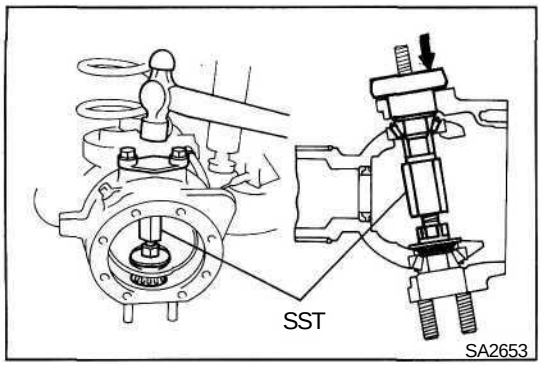

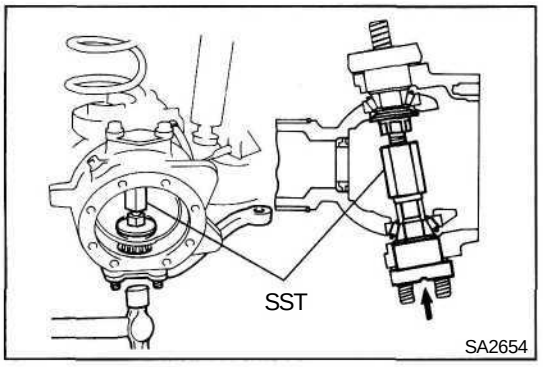

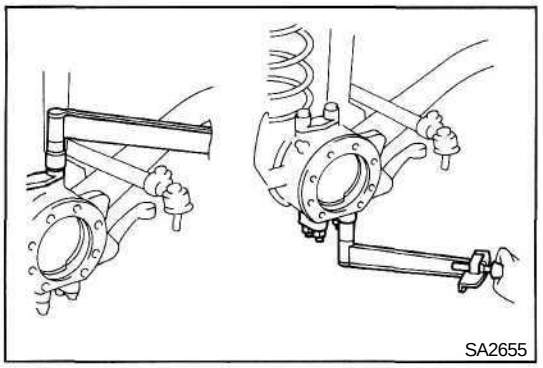

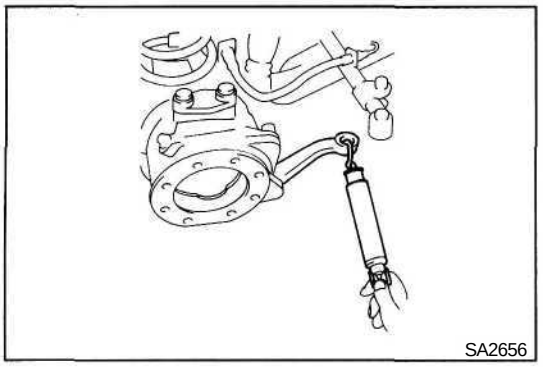

Adjusting shim thickness

Thickness mm (in.)
0.1 (0.004)
0.2 (0.008)
0.5 (0.020)
1.0 (0.039)

4. INSTALL KNUCKLE ARM AND BEARING CAP

(a) Using SST, support the upper bearing inner rece.

SST 09606-60020

HINT: Use SST with a collar

(b) Install the bearing cap or the third arm over the shims that were originally used.

(c) Using a hammer, tap the bearing cap or the third arm into the bearing inner race.

(d) Using SST, support the lower bearing inner race.

SST 09606-60020

(e) Install the knuckle arm.

(f) Using a hammer, tap the knuckle arm into the bearing inner race.

(g) Remove SST from the knuckle.

SST 09606-60020

(h) Install and torque the nuts.

(Knuckle Arm)

Install the cone washers, spring washers, nuts and torque the nuts.

Torque: 980 kg-cm (71 ft-lb, 96 N-m)

(Third Arm)

Install the cone washers, spring washers, nuts and torque tyhe nuts.

Torque: 980 kg-cm (71 ft-lb, 96 N-m)

(Bearing Cap)

Install the spring washers, bolts and torque the bolts.

Torque: 980 kg-cm (71 ft-lb, 96 N-m)

5. CHECK BEARING PRELOAD

Using a spring tension gauge, measure the preload.

Preload (starting): 2.5 — 4.5 kg
(5.6 - 9.9 lb, 25 - 44 N)

If the bearing preload is not within specification, adjust it by replacing the adjusting shims.

HINT:

- If the bearing preload is excessive, use thicker shims.
- If the bearing preload is insufficient, use thinner shims.
- The preload will change about 0.1 - 0.2 kg (0.2 - 0.4 lb, 1.0 - 2.0 N) with each 0.1 mm (0.004 in.) alteration of the adjusting shim thickness.

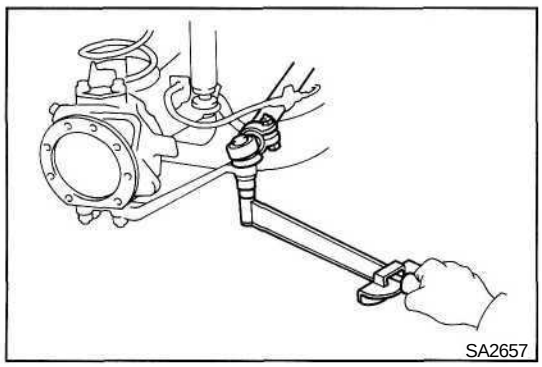

6. CONNECT TIE ROD TO KNUCKLE ARM

Torque the castle nut and secure it with a cotter pin.

Torque: 925 kg-cm (67 ft-lb, 91 N·m)

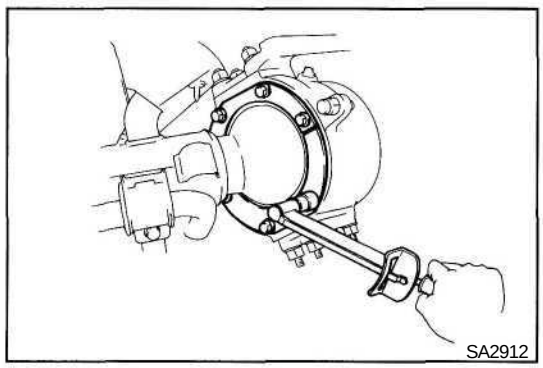

7. INSTALL OIL SEAL SET RETAINER TO KNUCKLE

Install the oil seal set retainer to steering knuckle with the six bolts.

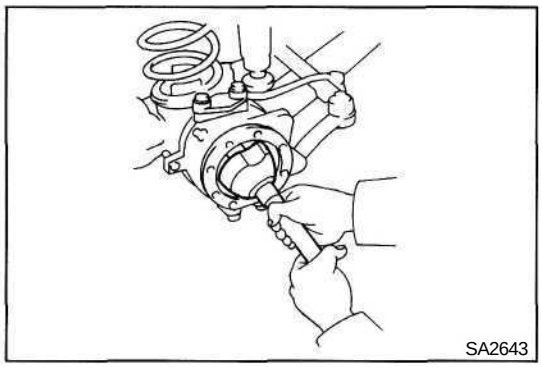

8. INSTALL AXLE SHAFT

Position one flat part of the outer shaft upward, and install the shaft.

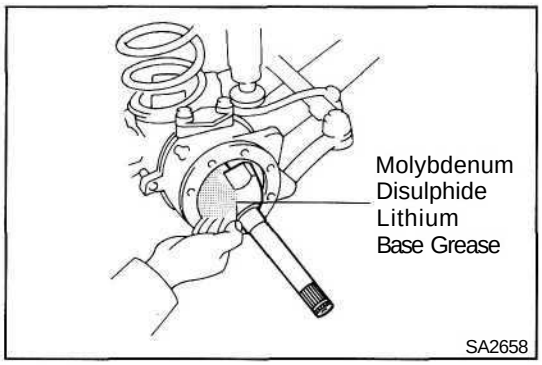

9. PACK MOLYBDENUM DISULPHIDE LITHIUM BASE GREASE

Pack molybdenum disulphide lithium base grease into the knuckle to about three fourths of the knuckle.

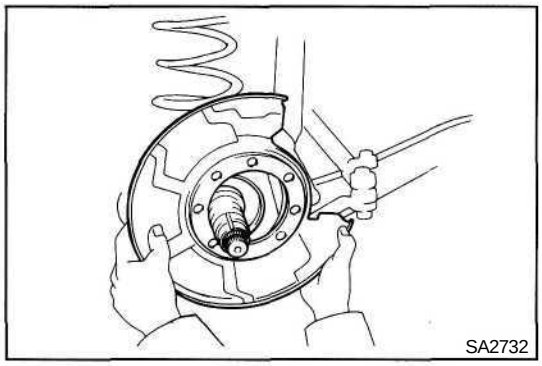

10. INSTALL KNUCKLE SPINDLE DUST COVER WITH NEW GASKETS AND DUST SEAL

(a) Place a new gasket in the position on the knuckle and install the spindle.

(b) Place the gasket, dust cover and seal on the spindle.

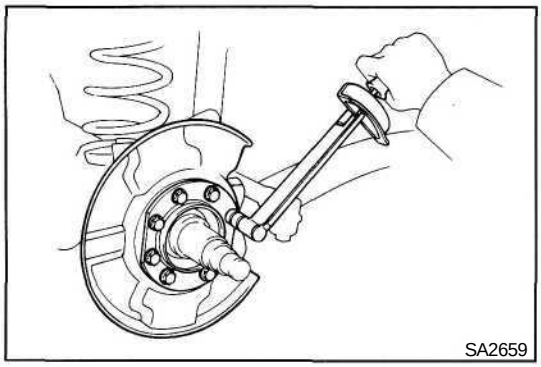

(c) Install and torque the spindle mounting bolts.

Torque: 475 kg-cm (34 ft-lb, 47 N·m)

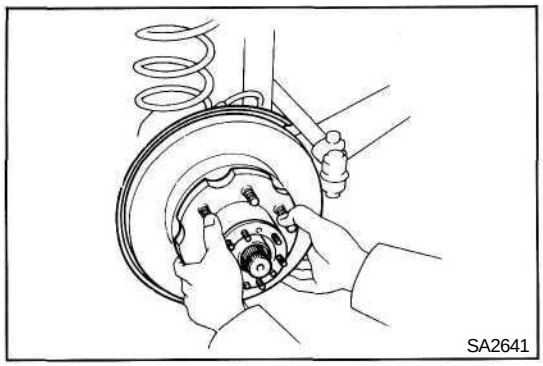

11. INSTALL AXLE HUB (See page SA-15)

FRONT DIFFERENTIAL

On-Vehicle Replacement of Rear Oil Seal

COMPONENTS

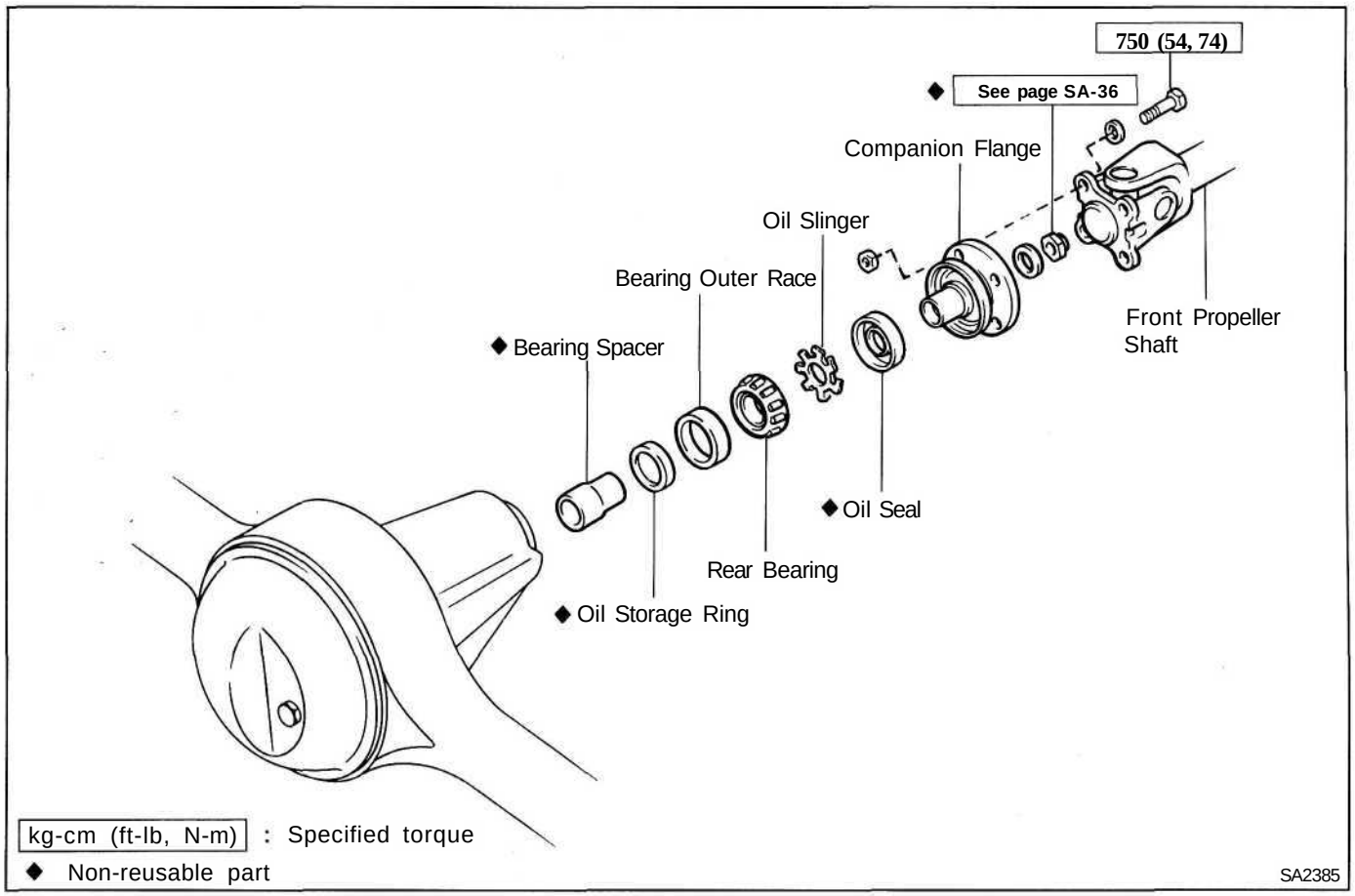

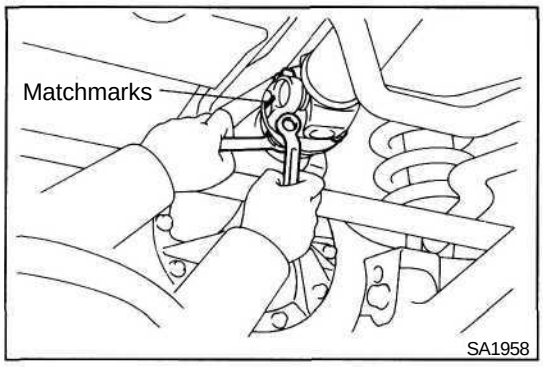

1. DISCONNECT FRONT PROPELLER SHAFT

(a) Place matchmarks on the flanges.

(b) Remove the four bolts and nuts.

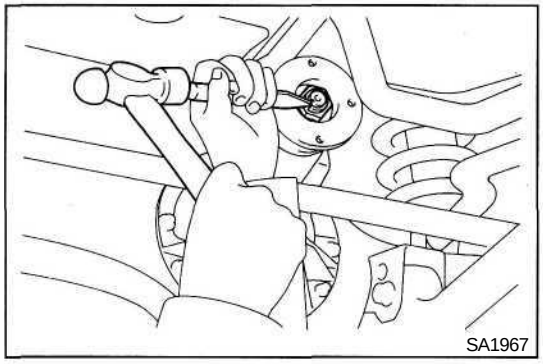

2. REMOVE COMPANION FLANGE

(a) Using a chisel and hammer, loosen the staked part of nut.

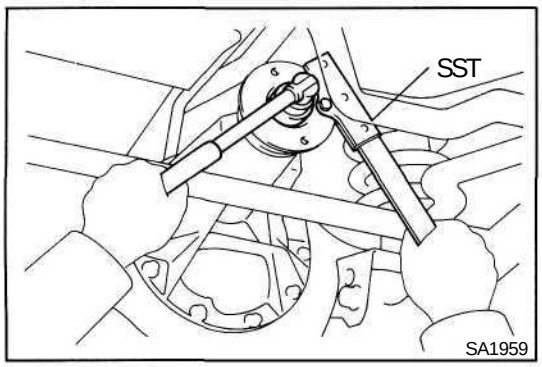

(b) Using SST to hold the flange, remove the nut and plate waster.

SST 09330-00021

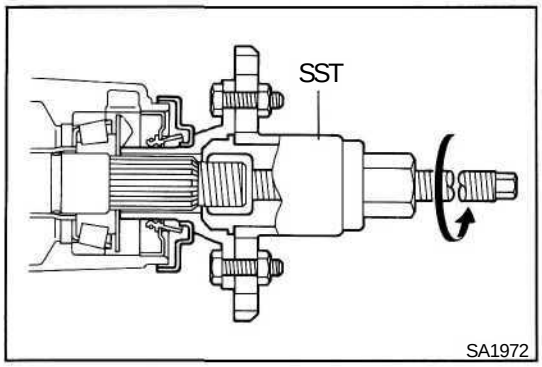

(c) Using SST, remove the companion flange.

SST 09557-22022 (09557-22050)

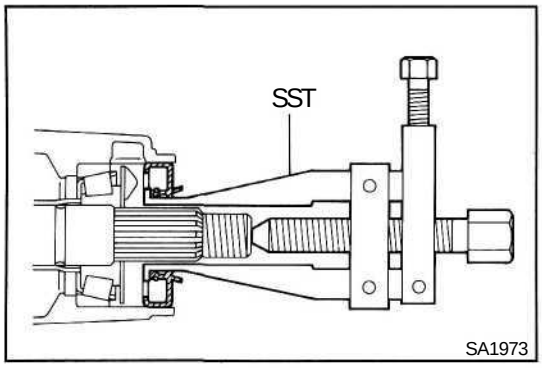

3. REMOVE OIL SEAL AND OIL SLINGER

(a) Using SST, remove the oil seal.

SST 09308-10010

(b) Remove the oil slinger.

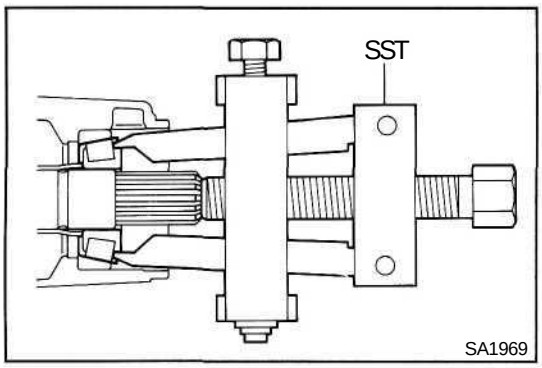

4. REMOVE REAR BEARING

Using SST, remove the rear bearing.

SST 09556-22010

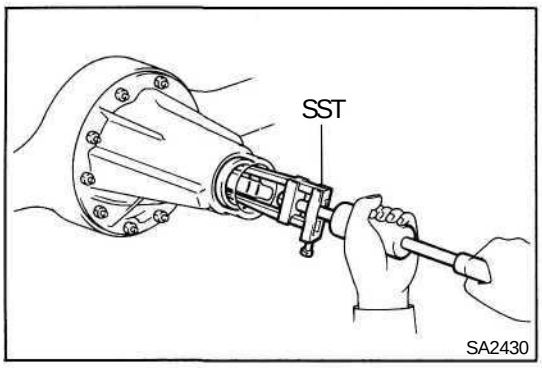

5. **REMOVE BEARING OUTER RACE**

Using SST, remove the bearing outer race.

SST 09308-00010

NOTICE: Do not scratch the taper surface of the outer race.

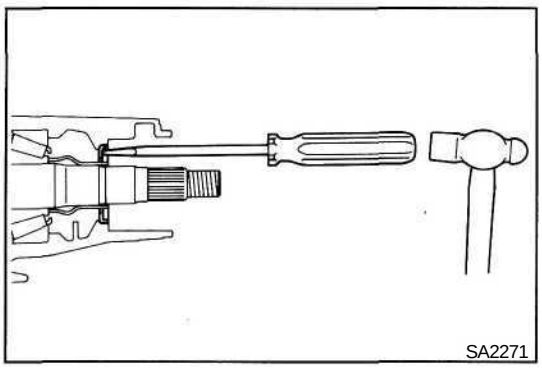

6. REMOVE OIL STORAGE RING

Using a screwdriver, bend the oil storage ring and drive it out.

7. REMOVE BEARING SPACER

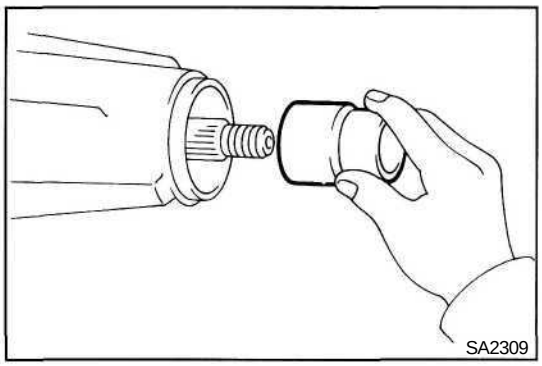

8. INSTALL NEW BEARING SPACER

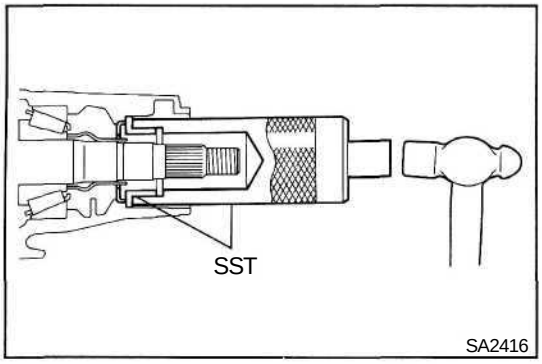

9. INSTALL NEW OIL STORAGE RING

Using SST, drive in a new oil storage ring.

SST 09316-60010 (09316-00010, 09316-00020)

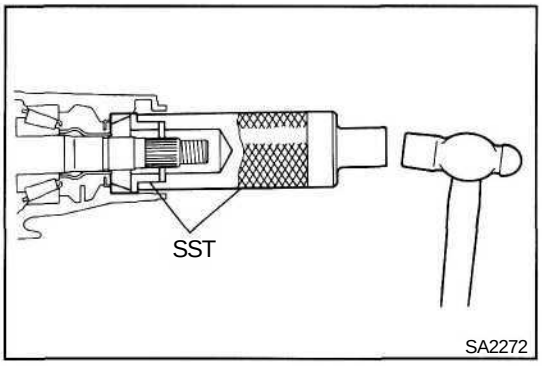

10. INSTALL BEARING OUTER RACE

Using SST, drive in the bearing outer race.

SST 09316-60010 (09316-00010, 09316-00020)

11. INSTALL REAR BEARING

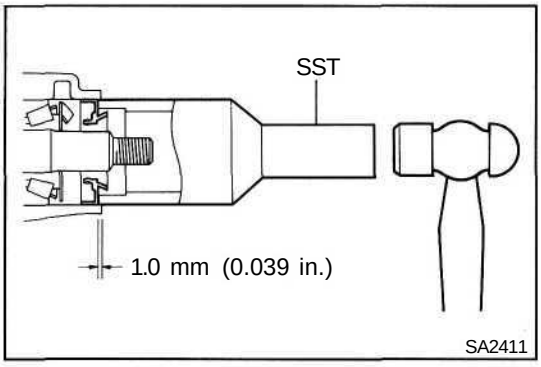

12. INSTALL OIL SLINGER AND NEW OIL SEAL

(a) Install the oil slinger facing as shown.

(b) Using SST, drive in a new oil seal as shown.

SST 09214-76011

Oil seal drive in depth: 1.0 mm (0.039 in.)

(c) Coat the lip of the oil seal with MP grease.

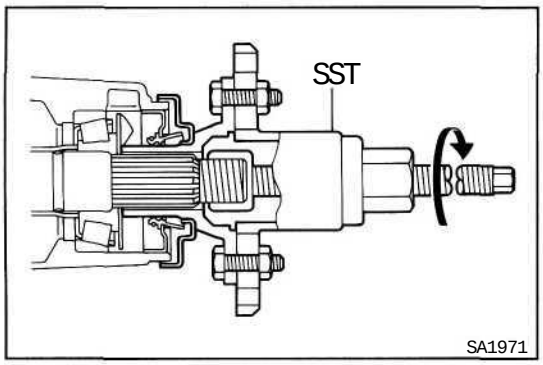

13. INSTALL COMPANION FLANGE

(a) Using SST, install the companion flange on the drive pinion.

SST 09557-22022 (09557-22050)

(b) Place the plate washer on the companion flange.

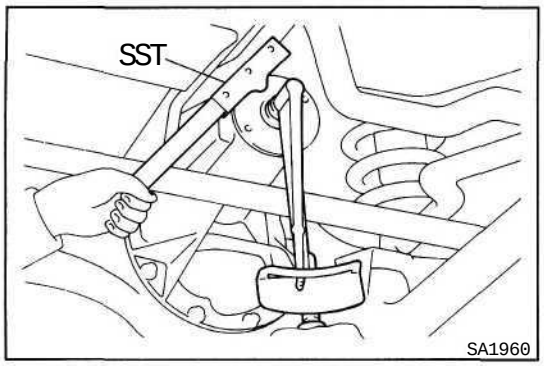

(c) Apply a light coat of gear oil on the threads of a new companion flange nut.

(d) Using SST to hold the flange, torque the nut.

SST 09330-00021

Torque: 2,000 kg-cm (145 ft-lb, 196 N·m)

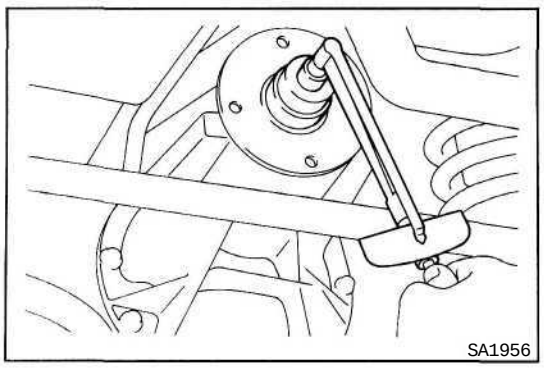

14. CHECK DRIVE PINION PRELOAD

Using a torque meter, measure the preload of the backlash between the drive pinion and ring gear.

Preload (at starting):

New bearing

10 - 16 kg-cm
(8.7 - 13.9 in.-lb, 0.9 - 1.6 N·m)

Reused bearing

5 - 8 kg-cm (4.3 - 6.9 in.-lb, 0.5 - 0.8 N·m)

- If the preload is greater than specification, replace the bearing spacer.
- If the preload is less than specification, retighten the nut 130 kg-cm (9 ft-lb, 13 N-m) a little at a time until the specified preload is reached.

If the maximum torque is exceeded while retightening the nut, replace the bearing spacer and repeat the preload procedure. Do not back off the pinion nut to reduce the preload.

Maximum torque: 3,500 kg-cm (253 ft-lb, 343 N·m)

If everything is normal, coat the threads with gear oil, then repeat the above operation.

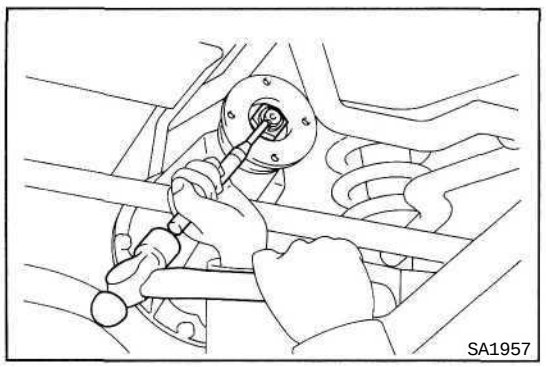

15. STAKE DRIVE PINION NUT

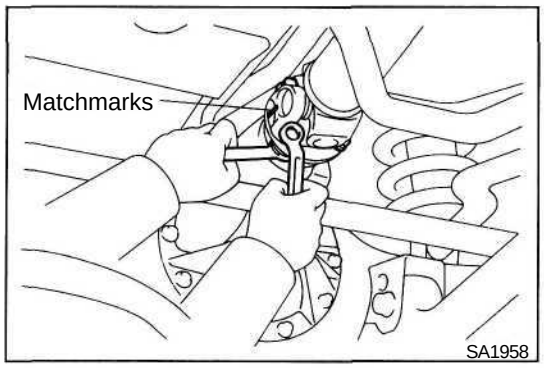

16. CONNECT FRONT PROPELLER SHAFT

(a) Align the matchmarks on the flanges and connect the flanges with four bolts, spring washers and nuts.

(b) Torque the bolts and nuts.

Torque: 750 kg-cm (54 ft-lb, 74 N-m)

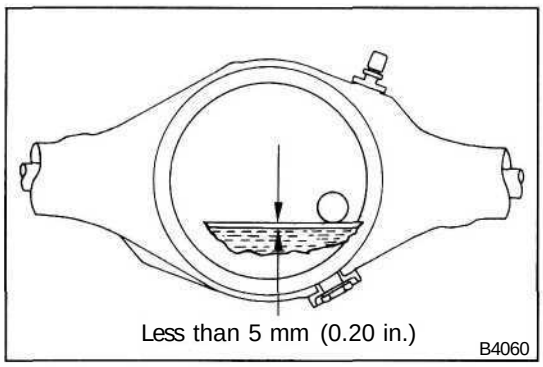

17. CHECK DIFFERENTIAL OIL LEVEL

Fill with hypoid gear oil if necessary.

Oil type: Hypoid gear oil API GL-5

Recommended oil viscosity:

Above -18°C (0°F) SAE 90

Below -18°C (0°F) SAE 80W or 80W-90

Capacity:

2 pinion type

2.8 liters (2.9 US qts, 2.4 Imp. qts)

w/ Differential lock

2.65 liters (2.8 US qts, 2.3 Imp. qts)

Removal and Installation of Front Differential

COMPONENTS

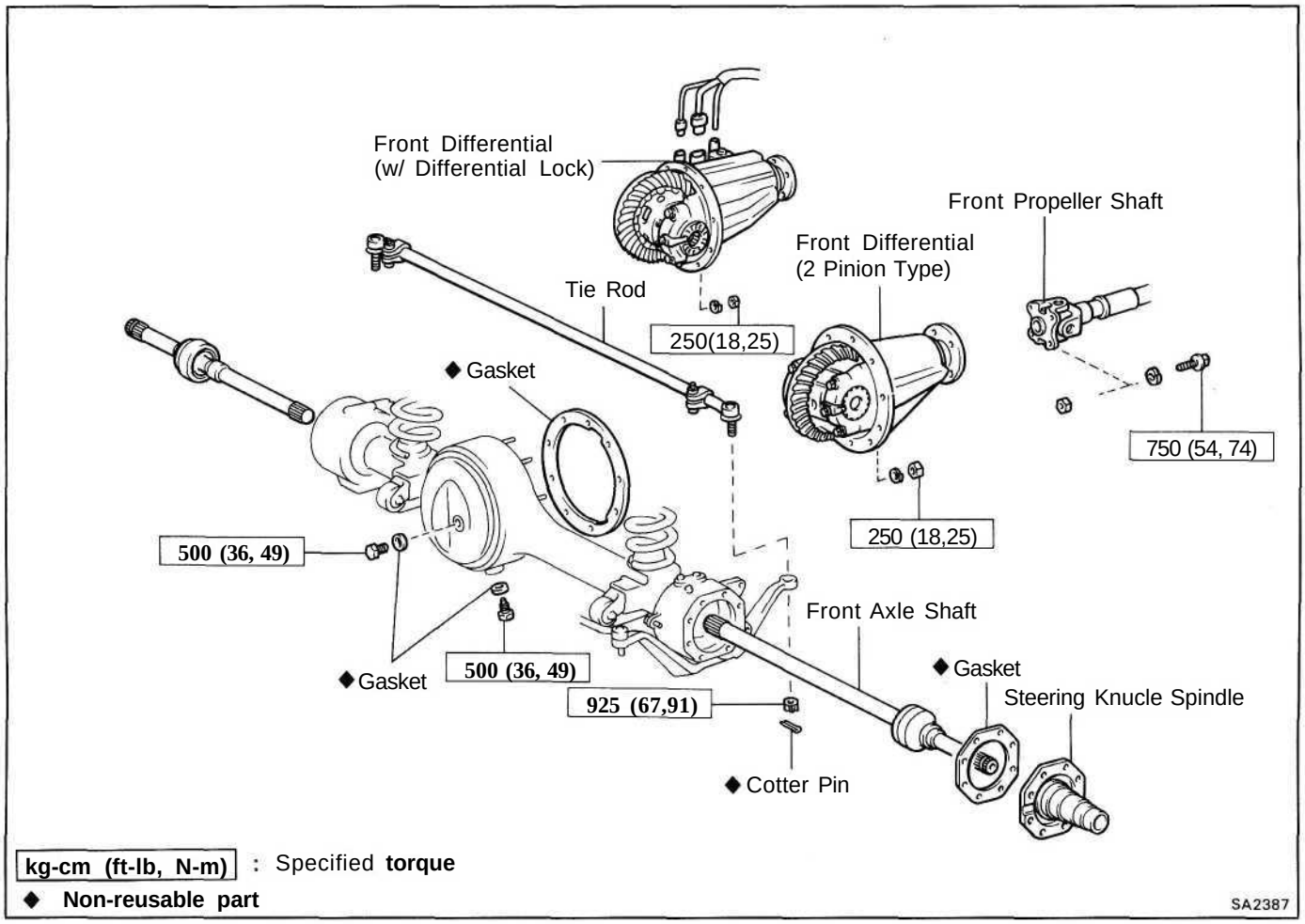

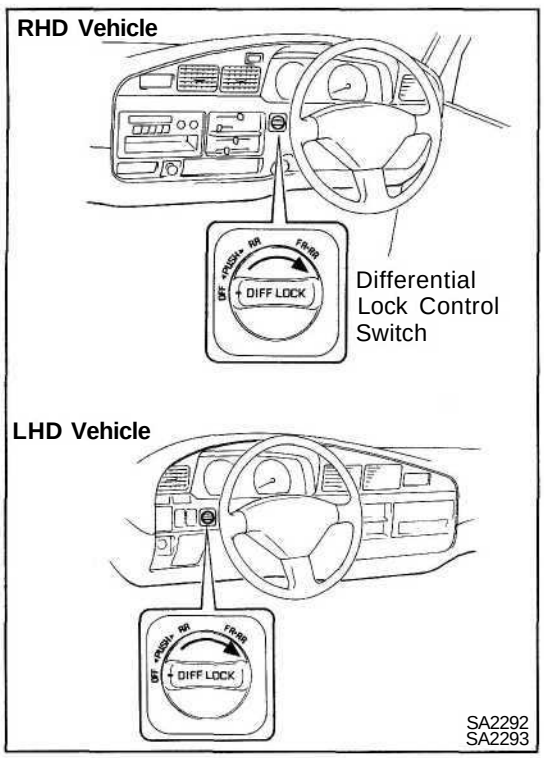

REMOVAL OF FRONT DIFFERENTIAL

1. **(w/ DIFFERENTIAL LOCK)**
   SHIFTING FRONT DIFFERENTIAL LOCK
   (a) Turn the ignition switch to ON position.
   (b) Keep the 4WD condition (Part-Time Models) or center differential lock condition (Full-Time Models).
   (c) Turn the differential lock control switch to FR-RR position and lock the front differential.

   HINT: Rotating the tires, check they are in the differential lock condition.

   (d) Disconnect the cable from the negative terminal of the battery.

2. **REMOVE DRAIN PLUG AND DRAIN DIFFERENTIAL OIL.**

3. **REMOVE FRONT AXLE SHAFTS**
   (See steps 1 to 5 on page SA-24)

4. **REMOVE TIE ROD**
   (See step 6 on page SA-24)

5. **DISCONNECT FRONT PROPELLER SHAFT**
   (See step 1 on page SA-33)

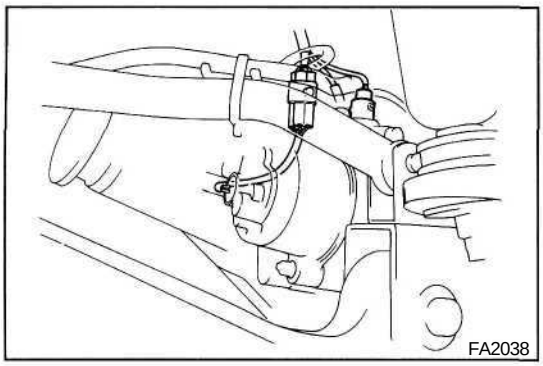

6. **(w/ DIFFERENTIAL LOCK)**
   DISCONNECT CONNECTORS AND TUBE

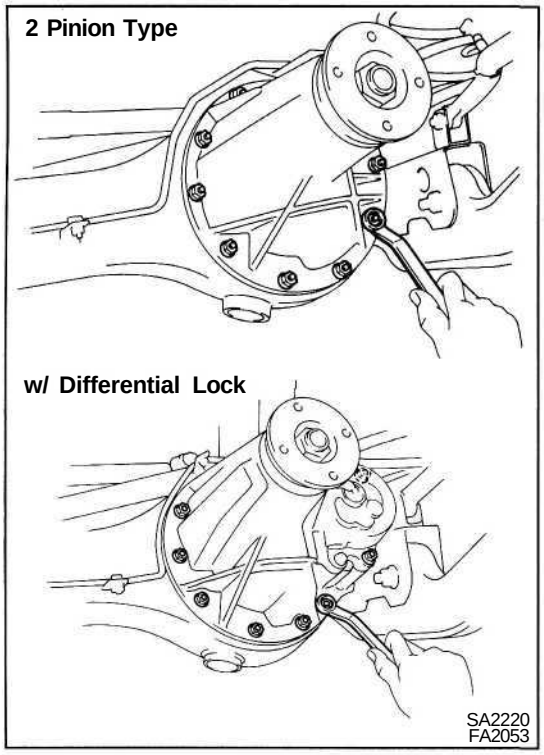

7. **REMOVE DIFFERENTIAL CARRIER ASSEMBLY**
   NOTICE: Do not scratch the installation surface.

INSTALLATION OF FRONT DIFFERENTIAL

(See page SA-38)

1. **(w/ DIFFERENTIAL LOCK)**
   CHECK DIFFERENTIAL LOCK OPERATION
   (a) Connect the connector of the actuator to the connector of the vehicle side, and check that the sleeve is on work with switching over the differential lock control switch.
   (b) After checking, lock the front differential.

2. **INSTALL A NEW GASKET**

3. **INSTALL DIFFERENTIAL CARRIER ASSEMBLY**
   Install the differential carrier assembly in the axle and install the ten nuts. Torque the nuts.
   Torque: 280 kg-cm (20 ft-lb, 27 N-m)

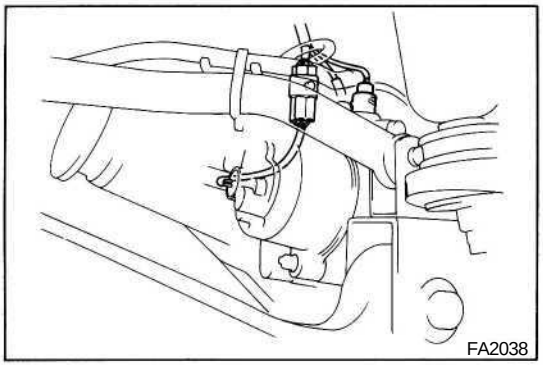

4. (w/ DIFFERENTIAL LOCK) CONNECT CONNECTORS AND TUBE

HINT:

- When connecting the tube of the harness side to the hose of the actuator side, its depth of insertion is 1 5 mm (0.59 in.),
- Take care that water or the equivalent shall not adhere to the connector and hose.

5. CONNECT FRONT PROPELLER SHAFT
(See step 16 on page SA-37)

6. INSTALL TIE ROD
(See step 6 on page SA-30)

7. INSTALL FRONT AXLE SHAFTS
(See steps 8 to 12 on page SA-31)

8. INSTALL DRAIN PLUG

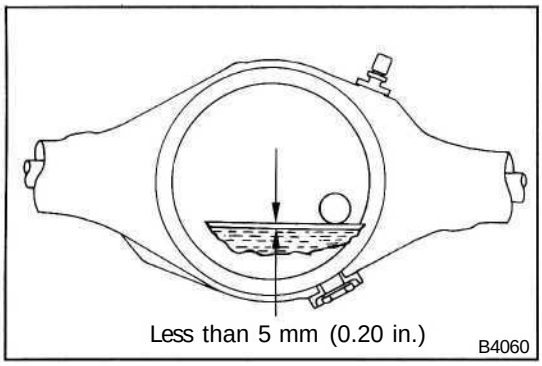

9. FILL DIFFERENTIAL WITH GEAR OIL

Fill with hypoid gear oil.

Oil type: Hypoid gear oil API GL-5

Recommended oil viscosity:

Above -18°C (0°F) SAE 90

Below -18°C (0°F) SAE 80W or 80W-90

Capacity:

2 pinion type
2.8 liters (2.9 US qts, 2.4 Imp. qts)
w/ Differential lock
2.65 liters (2.8 US qts, 2.3 Imp. qts)

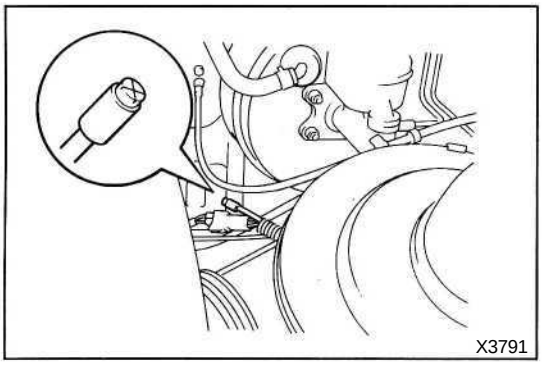

10. (w/DIFFERENTIAL LOCK) CHECK BLEEDER PLUG

Check that the bleeder plug at the point of the bleeder tube (inside of the engine room) is not damaged or worn.

Differential Carrier

COMPONENTS

2 Pinion Type

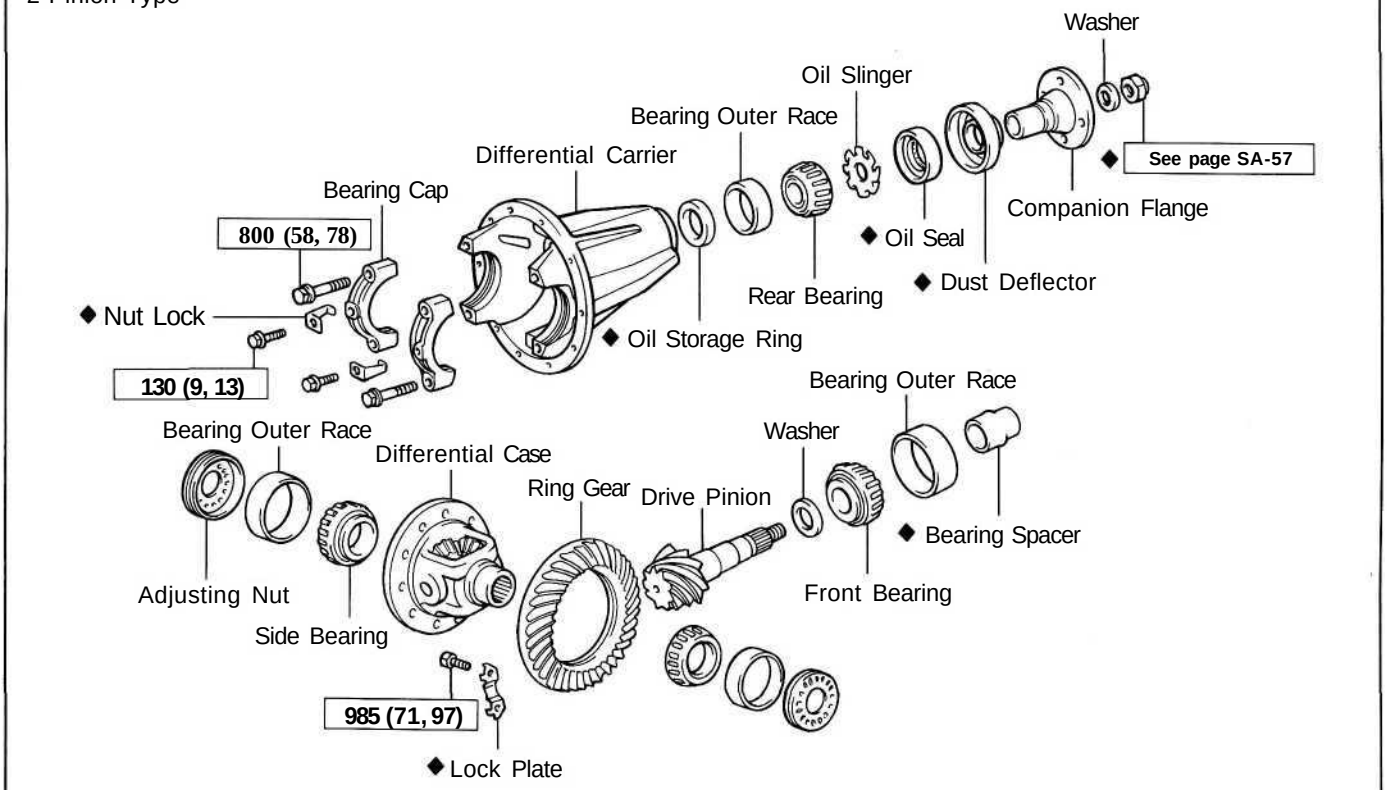

w/ Differential Lock (4 Pinion Type)

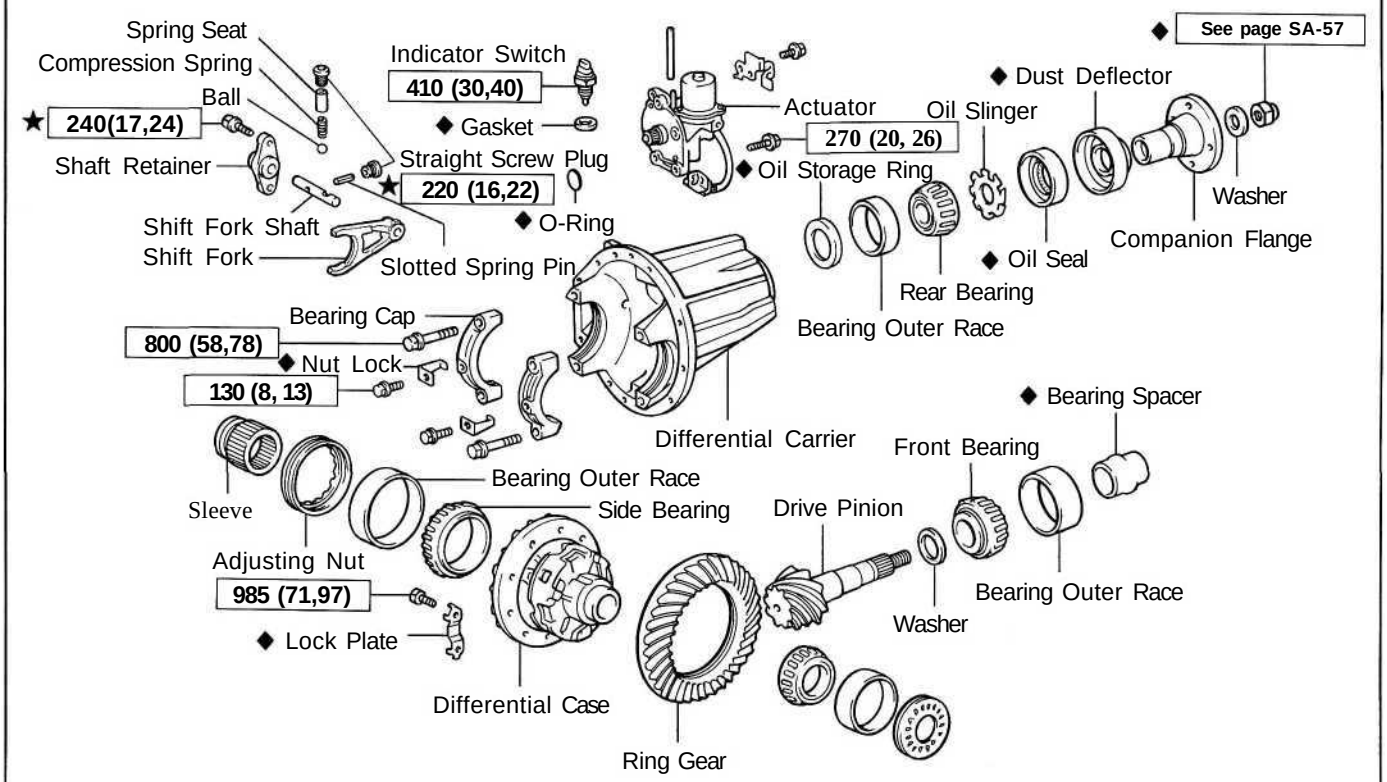

kg-cm (ft-lb, N-m) : Specified torque

◆ Non-reusable part

★ Precoated part

SA2579
SA2616

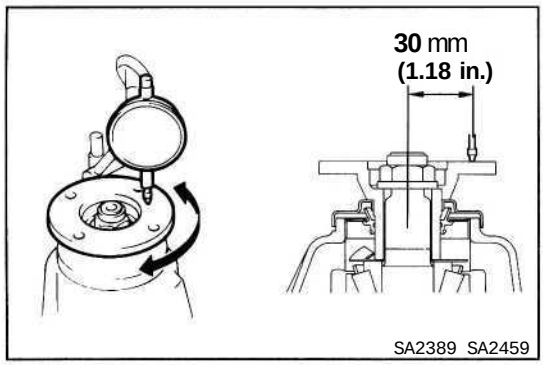

INSPECTION OF DIFFERENTIAL CARRIER

1. CHECK RUNOUT OF COMPANION FLANGE

Using a dial indicator, measure the vertical and lateral runout of the companion flange.

Maximum vertical runout: 0.10 mm (0.0039 in.)

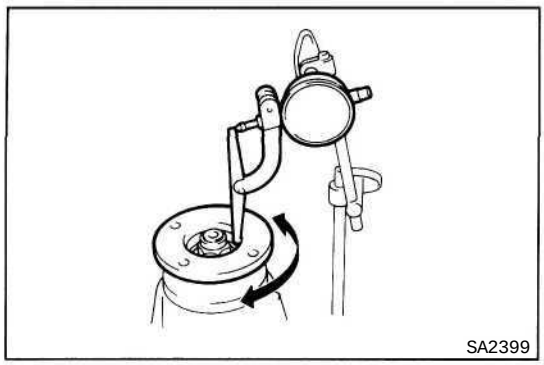

Maximum lateral runout: 0.10 mm (0.0039 in.)

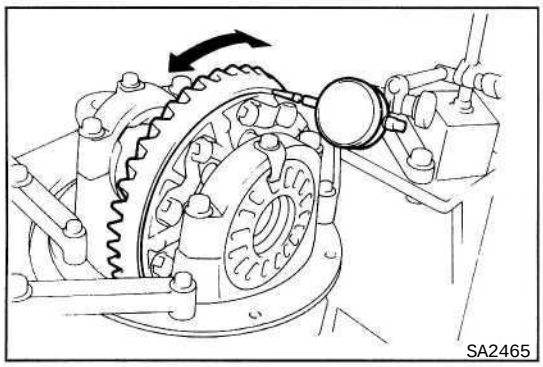

2. CHECK RING GEAR RUNOUT

If the runout is greater than maximum, replace the ring gear.

Maximum runout: 0.10 mm (0.0039 in.)

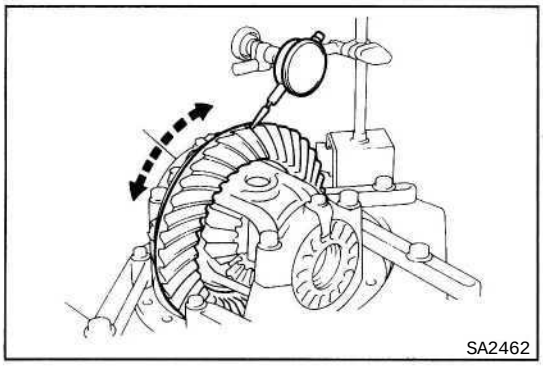

3. CHECK RING GEAR BACKLASH

If the backlash is not within specification, adjust the side bearing preload or repair as necessary.

Backlash: 0.13 - 0.18 mm (0.0051 - 0.0071 in.)

HINT: Perform the measurements at three or more positions around the circumference of the ring gear.

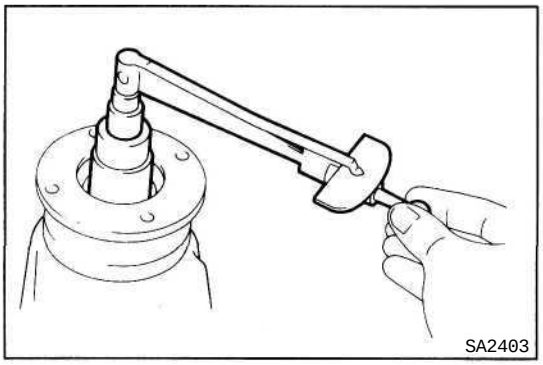

4. MEASURE DRIVE PINION PRELOAD

Measure the drive pinion preload, using the backlash of the drive pinion and ring gear.

Preload (at starting): 5 — 8 kg-cm
(4.3 - 6.9 in.-lb, 0.5 - 0.8 N·m)

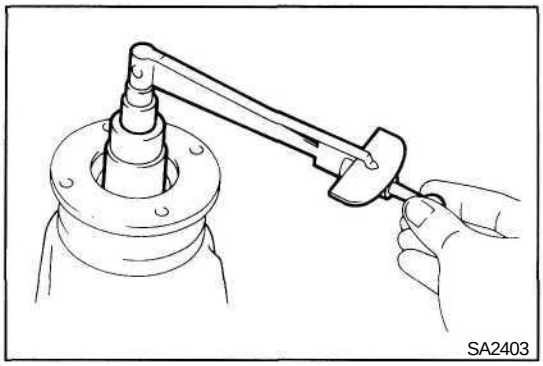

5. CHECK TOTAL PRELOAD

Using a torque meter, measure the total preload.

Total preload: In addition to drive pinion preload
4 - 6 kg-cm (3.5 - 5.2 in.-lb, 0.4 - 0.6 N-m)

If necessary, disassemble and inspect a differential.

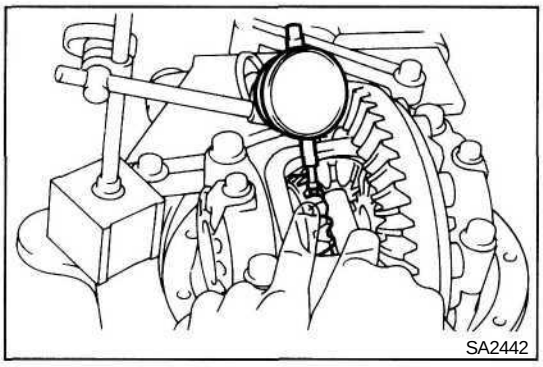

6. (2 PINION TYPE)
CHECK SIDE GEAR BACKLASH

Measure the side gear backlash while holding one pinion gear toward the case.

Standard backlash: 0.05 — 0.20 mm
(0.0020 - 0.0079 in.)

If the backlash is out of specification, install the correct thrust washers. (See page SA-63)

7. INSPECT TEETH CONTACT BETWEEN RING GEAR AND DRIVE PINION
(See step 11 on page SA-56)

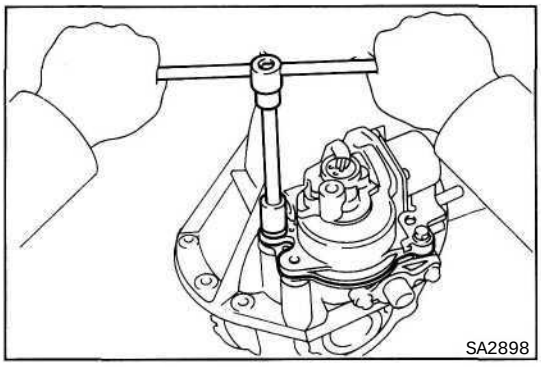

DISASSEMBLY OF DIFFERENTIAL CARRIER

(See page SA-41)

1. (w/ DIFFERENTIAL LOCK)
REMOVE ACTUATOR

(a) Remove the bolt and actuator from the differential carrier.

(b) Remove the O-ring.

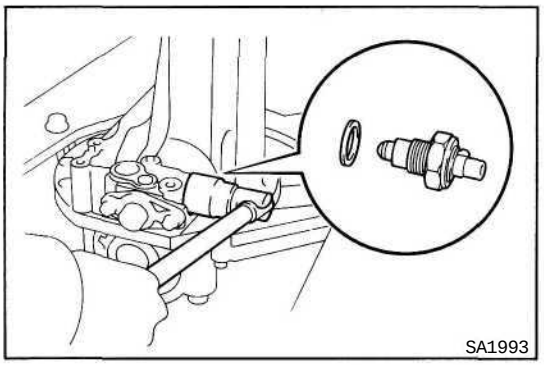

2. (w/ DIFFERENTIAL LOCK)
REMOVE INDICATOR SWITCH

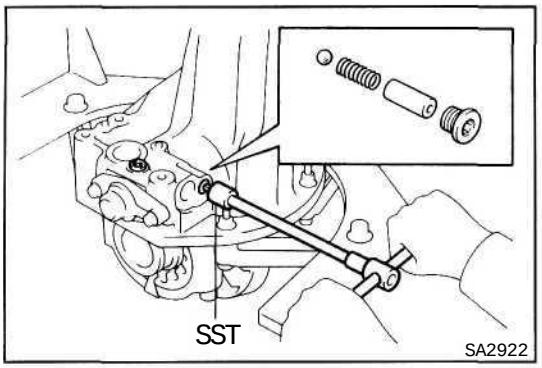

3. (w/ DIFFERENTIAL LOCK)
REMOVE SHIFT FORK SHAFT

(a) Using SST, remove the two straight screw plugs.

SST 09313-30021

(b) Remove the spring seat, compression spring and ball.

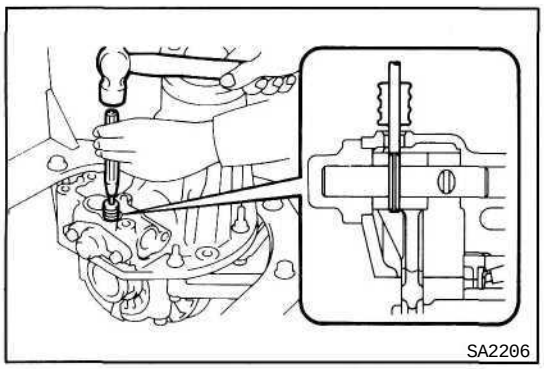

(c) Using a pin punch and hammer, drive out the slotted spring pin.

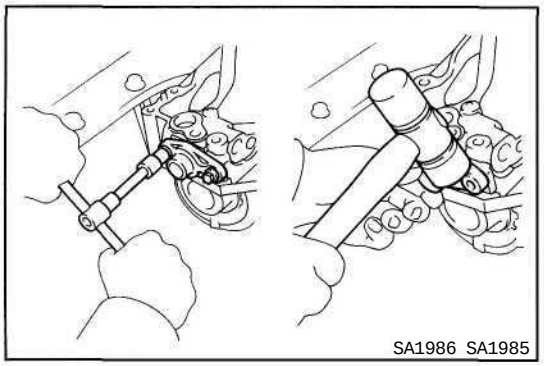

(d) Remove the two bolts from the shaft retainer.

(e) Using a prastic hammer, tap out the shaft retainer.

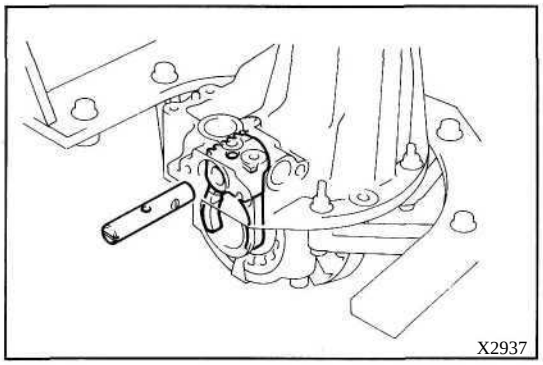

(f) Remove the shift fork shaft.

HINT: Pull out the shift fork shaft with the screwdriver turned round.

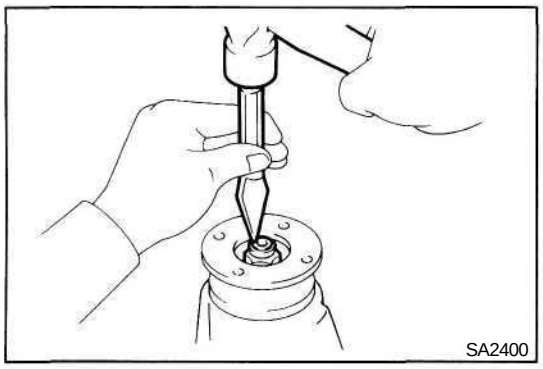

4. REMOVE COMPANION FLANGE

(a) Using a hammer and chisel, loosen the staked part of the nut.

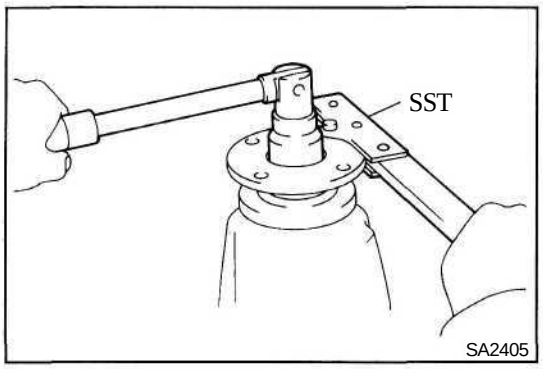

(b) Using SST to hold the flange, remove the nut and plate washer.

SST 09330-00021

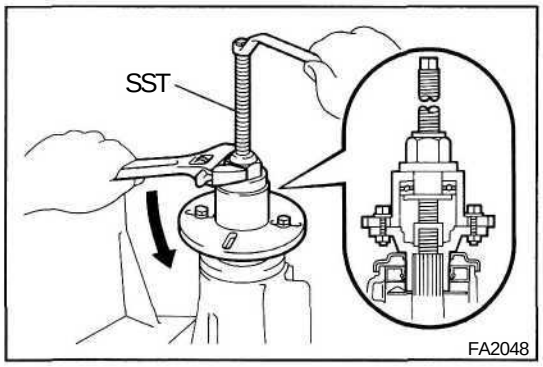

(c) Using SST, remove the companion flange.

SST 09557-22022 (09557-22050)

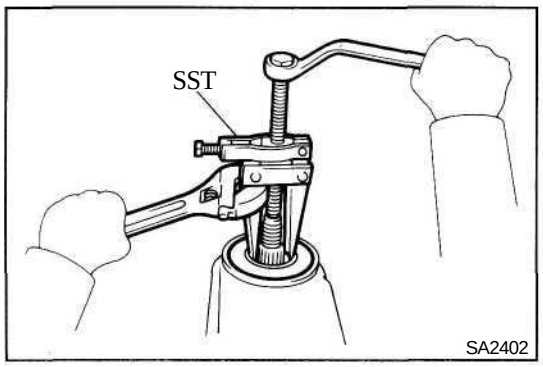

5. REMOVE REAR OIL SEAL AND OIL SLINGER

(a) Using SST, remove the oil seal from the housing.

SST 09308-10010

(b) Remove the oil slinger.

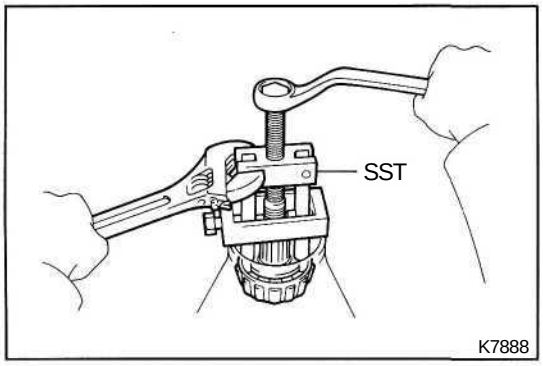

6. REMOVE REAR BEARING

Using SST, remove the bearing from the housing.

SST 09556-22010

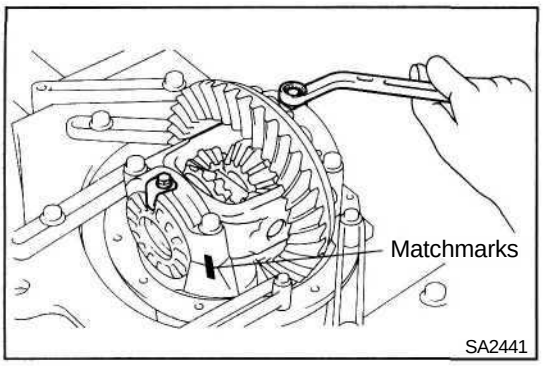

7. REMOVE DIFFERENTIAL CASE

(a) (2 pinion type only)
Place matchmarks on the bearing cap and differential carrier.

(b) Remove the two adjusting nut locks.

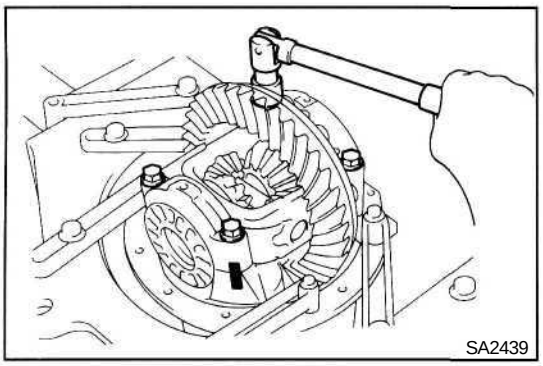

(c) Remove the four bolts and the two bearing caps.

(d) (2 pinion type only)
Remove the two adjusting nuts.

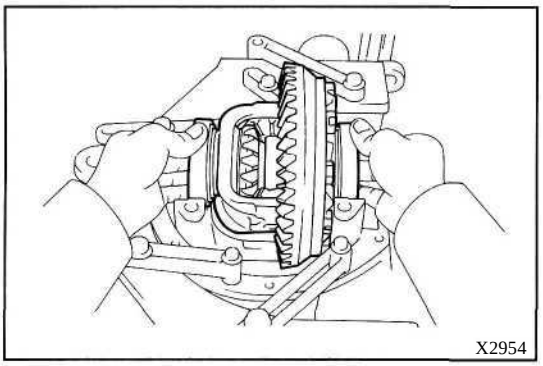

(e) (2 pinion type only)
Remove the differential case with the side bearing outer races from the differential carrier.

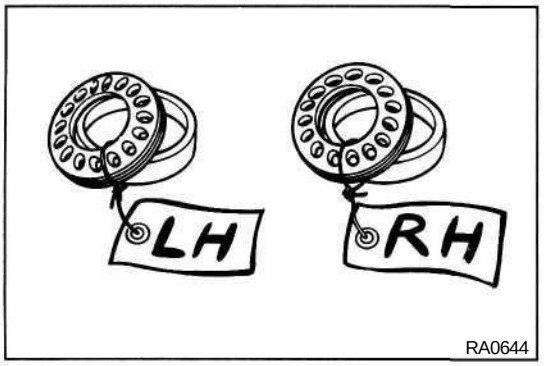

HINT: Tag the disassembled parts to show the location for reassembly.

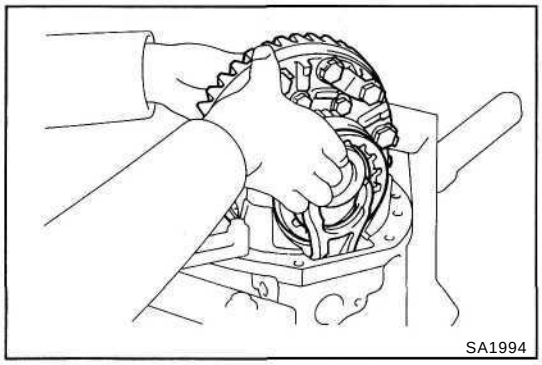

(f) (w/ Differential lock only)
Remove the differential case with both side bearing outer races, adjusting nuts and sleeve from the differential carrier.

(g) (w/ Differential lock only)
Remove the shift fork.

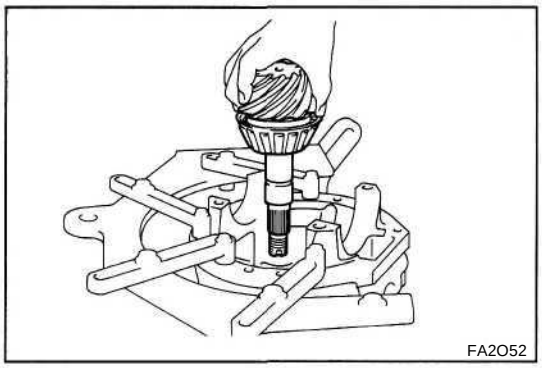

8. REMOVE DRIVE PINION AND BEARING SPACER

(a) Remove the drive pinion with the front bearing.

(b) Remove the bearing spacer.

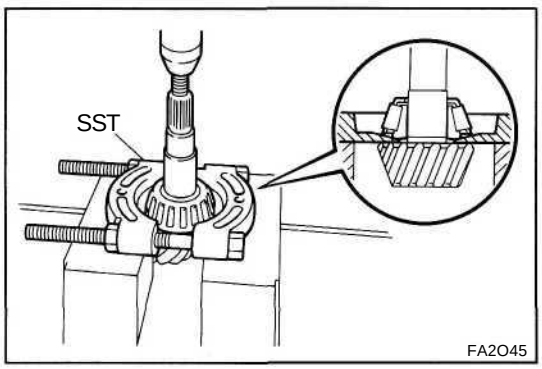

9. REMOVE DRIVE PINION FRONT BEARING

(a) Using SST and a press, remove the bearing from the drive pinion.

SST 09950-00020

HINT: If the drive pinion or ring gear are damaged, replace them as a set.

(b) Remove the washer from the drive pinion.

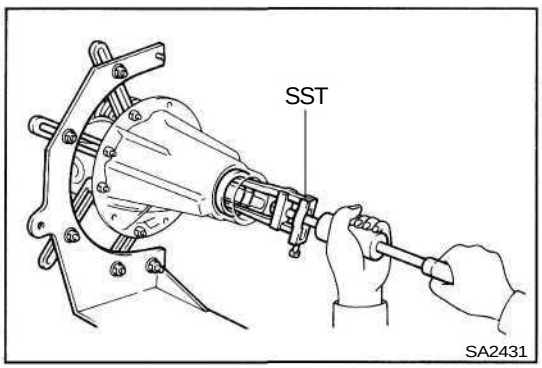

10. REMOVE FRONT, REAR BEARING OUTER RACES AND OIL STORAGE RING

(a) Using SST, remove the bearing outer race.

SST 09308-00010

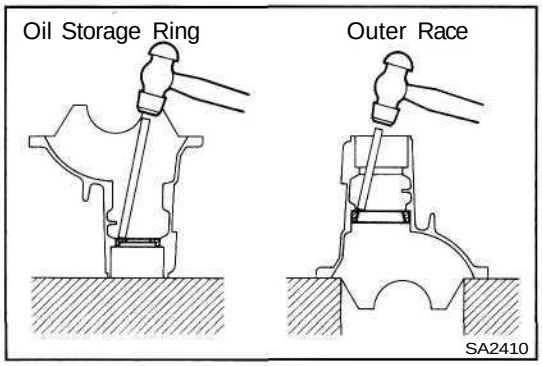

(b) Using a hammer and brass bar, drive out the oil storage ring and outer race from the carrier.

HINT: Do not remove the oil storage ring unless replacing it with a new one.

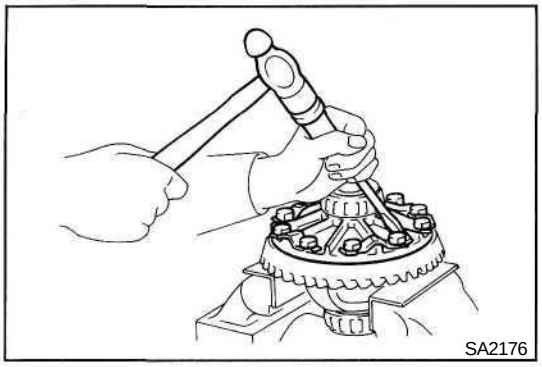
SA2176

11. REMOVE RING GEAR

(a) Using a screwdriver, unstake the lock plates.

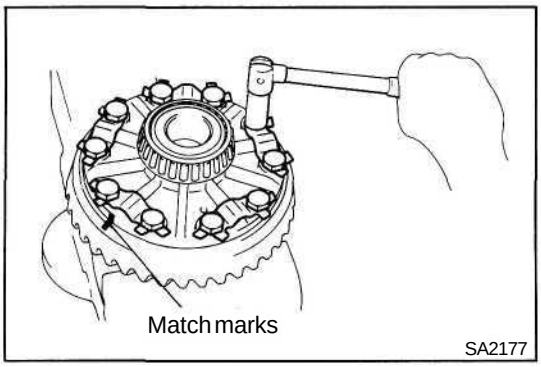

SA2177

(b) Place matchmarks on the ring gear and differential case.

(c) Remove the ten bolts and five lock plates.

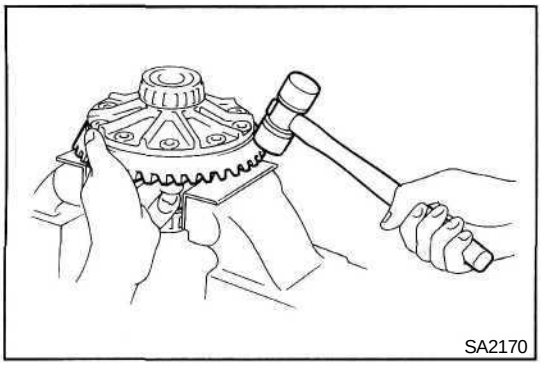
SA2170

(d) Using a plastic or copper hammer, tap on the ring gear to separate it from the differential case.

12. CHECK DIFFERENTIAL CASE RUNOUT

(a) Place the bearing outer races on their respective bearings. Check that the left and right outer races are not interchanged.

(b) Install the differential case in the differential carrier.

(c) When there is no play left in the side bearings, install the adjusting nuts.

(d) Align the matchmarks on the bearing cap and differential carrier.

(e) Install and uniformly tighten the four bearing cap bolts in several passes.

(f) Using a dial indicator, measure the differential case runout.

Maximum runout: 0.07 mm (0.0028 in.)

(g) Remove the differential case.
(See step 7 on page SA-46)

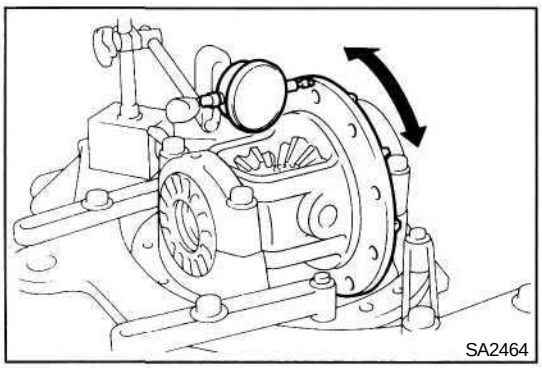
SA2464

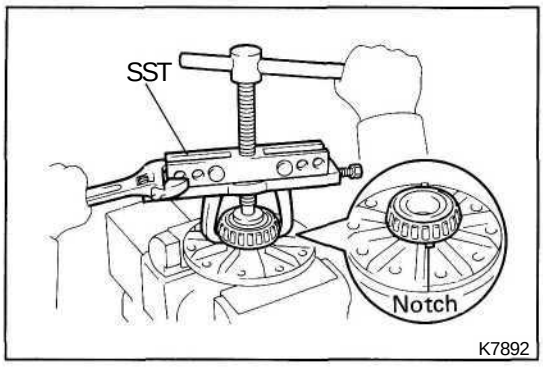

13. REMOVE SIDE BEARINGS

Using SST, remove the side bearing from the differential case.

SST 09950-2001 7

HINT: Fix the claws of SST to the notch in the differential case.

14. DISASSEMBLE DIFFERENTIAL CASE

2 pinion type: See page SA-62
w/ Differential lock (4 pinion type)
: See page SA-64

INSPECTION AND REPLACEMENT OF DIFFERENTIAL COMPONENTS

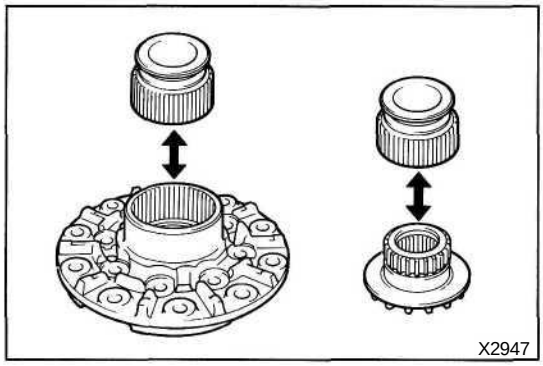

1. (w/DIFFERENTIAL LOCK)
INSPECT SLEEVE

(a) Install the sleeve to the differential case (LH) and check it moves smoothly.

(b) Install the sleeve to the side gear and check it moves smoothly.

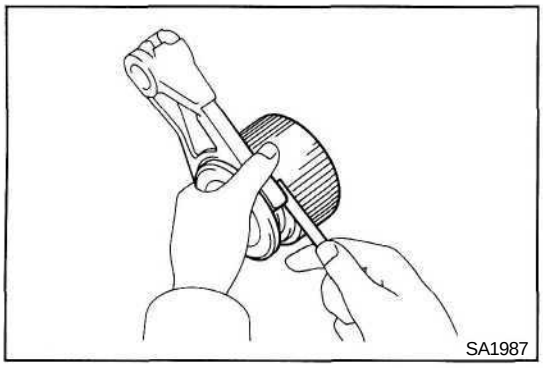

2. (w/ DIFFERENTIAL LOCK)
MEASURE CLEARANCE OF SHIFT FORK AND SLEEVE

Using a feeler gauge, measure the clearance between the shift fork and sleeve.

Clearance (Reference): 0.15 — 0.35 mm
(0.06 - 0.014 in.)

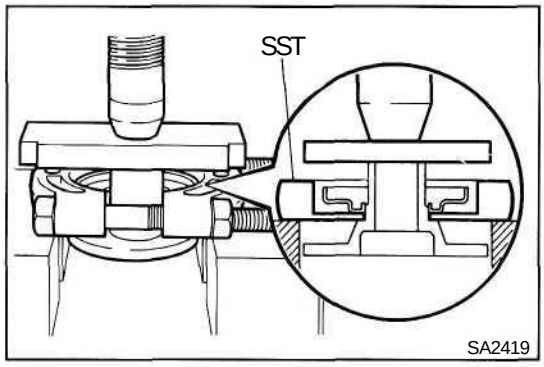

3. REPLACE COMPANION FLANGE DUST DEFLECTOR

(a) Using SST and a press, remove the dust deflector.

SST 09950-00020

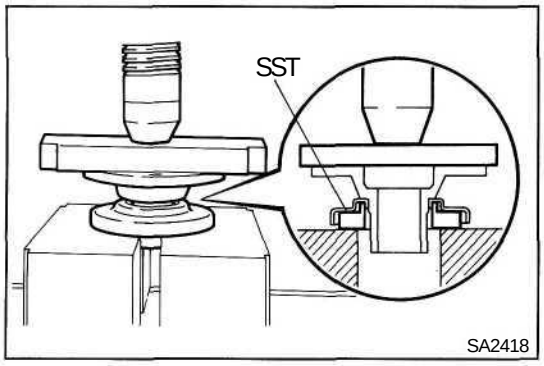

(b) Using SST and a press, install a new dust deflector.

SST 09726-40010

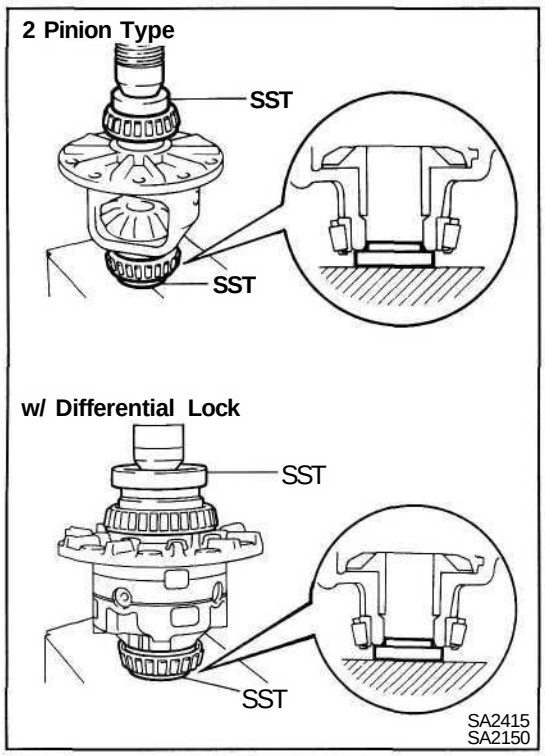

ASSEMBLY OF DIFFERENTIAL CARRIER

(See page SA-41)

1. INSTALL SIDE BEARINGS

Using SST and a press, install the two side bearings on the differential case.

SST 2 pinion type
09608-30012 (09608-00060, 09608-04060)
w/ Differential lock
09223-1 5020 and 09608-30012 (09608-04060)

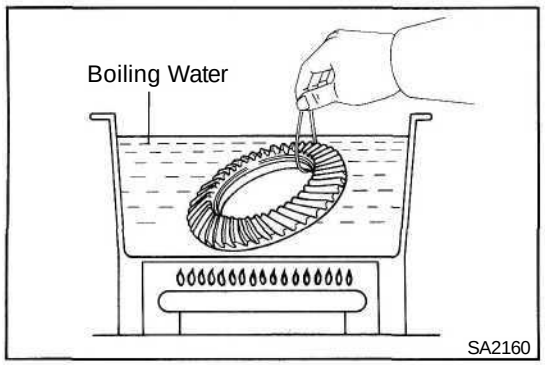

2. INSTALL RING GEAR ON DIFFERENTIAL CASE

(a) Clean the contact surfaces of the differential case and ring gear.

(b) Heat the ring gear in boiling water.

(c) After the moisture on the ring gear has completely evaporated, quickly install the ring gear to the differential case.

HINT: Align the matchmarks on the ring gear and the differential case.

(d) Temporarily install five new lock plates and the ten bolts so that the bolt holes in the ring gear and differential case are not misaligned.

NOTICE: The ring gear set bolts should not be tight until the ring gear has cooled sufficiently.

(e) After the ring gear has cooled sufficiently, torque the ring gear set bolts.

Torque: 985 kg-cm (71 ft-lb, 97 N-m)

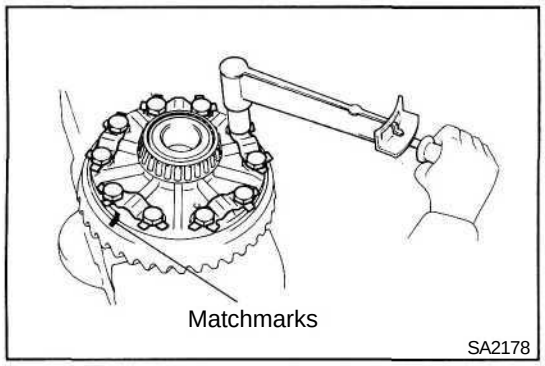

(f) Using a hammer and drift punch, stake the lock plates.

HINT: Stake one claw flush with the flat surface of the nut. For the claw contacting the protruding portion of the nut, stake the half on the tightening side.

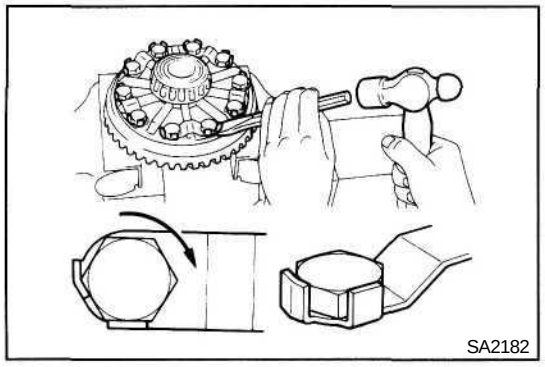

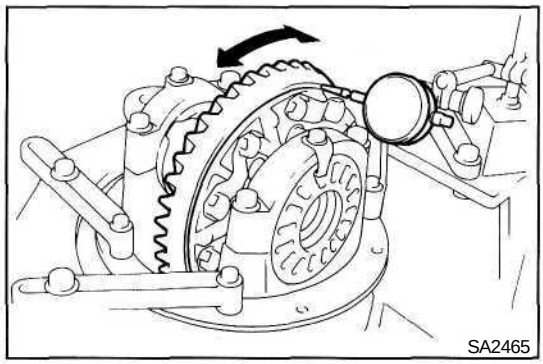

3. CHECK RING GEAR RUNOUT

(a) Install the differential case onto the carrier.

(b) Install bearing caps. (See page SA-53)

(c) Using a dial indicator, measure the runout of ring gear.

Maximum runout: **0.10** mm (0.0039 in.)

(d) Remove the differential case.
(See step 7 on page SA-46)

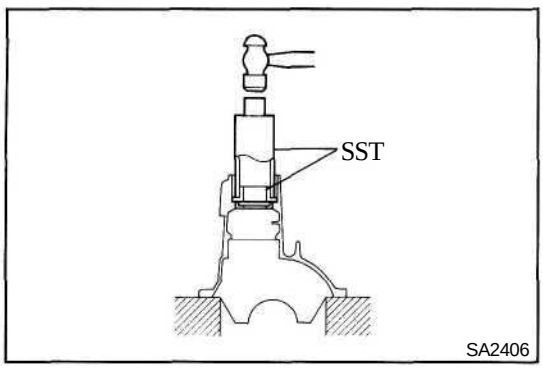

4. INSTALL OIL STORAGE RING

Using SST and a hammer, install a new oil storage ring.

SST 09316-60010 (09316-00010, 09316-00020)

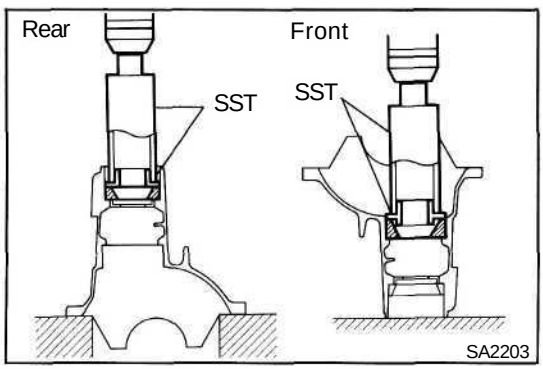

5. INSTALL DRIVE PINION FRONT AND REAR BEARING OUTER RACES

Using SST and a press, install the outer races.

SST 09316-60010

Rear (09316-00010,09316-00020)
Front (09316-00010, 09316-00050)

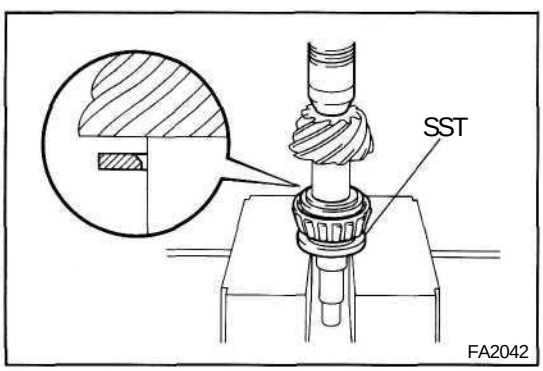

6. INSTALL DRIVE PINION FRONT BEARING

(a) Install the washer on the drive pinion with the chamfered end facing the pinion gear.

HINT: First fit a washer with the same thickness as the washer which was removed, then after checking the teeth contact pattern, replace the washer with one of a different thickness if necessary.

(b) Using SST and a press, install the front bearing to the drive pinion.

SST 09506-30012

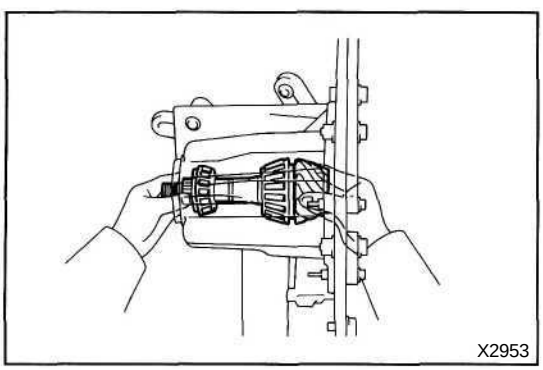

7. TEMPORARILY ADJUST DRIVE PINION PRELOAD

(a) Install the drive pinion, rear bearing and oil slinger.

HINT: Assemble the spacer and oil seal after adjusting the teeth contact pattern.

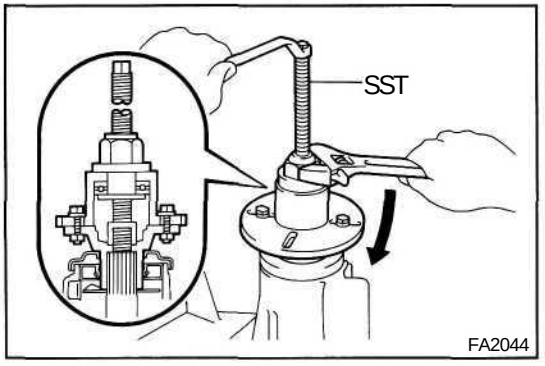

(b) Using SST, install the companion flange.

SST 09557-22022 (09557-22050)

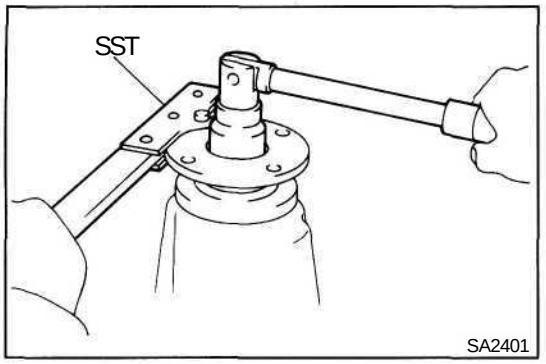

(c) Adjust the drive pinion preload by tightening the companion flange nut.

HINT: Using SST to hold the flange, tighten the nut.

SST 09330-00021

NOTICE: As there is no spacer, tighten the nut a little at a time, being careful not to overtighten it.

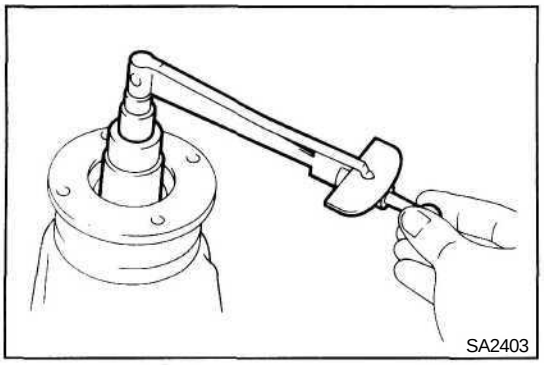

(d) Using a torque meter, measure the preload.

Preload (at starting):

New bearing

1 0 - 1 6 kg-cm

(8.7 - 13.9 in.-lb, 0.9 - 1.6 N·m)

Reused bearing

5 - 8 kg-cm (4.3 - 6.9 in.-lb. 0.5 - 0.8 N·m)

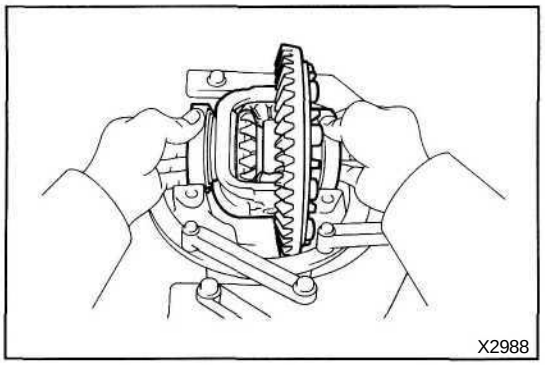

8. INSTALL DIFFERENTIAL CASE AND ADJUSTING NUTS (2 PINION TYPE)

(a) Place the bearing outer races on their respective bearings. Make sure that the left and right outer races are not interchanged.

(b) Install the case in the carrier.

HINT: Make sure that there is backlash between the ring gear and drive pinion.

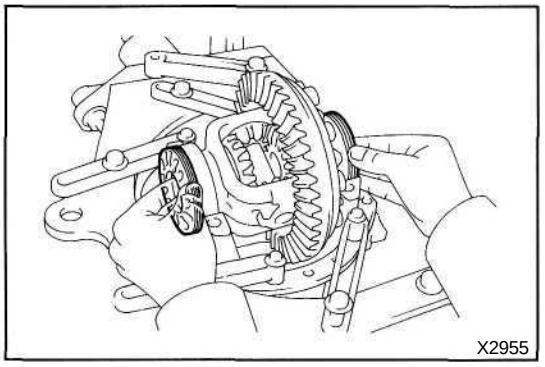

(c) Install the adjusting nuts on the carrier, making sure that the nuts are threaded properly.

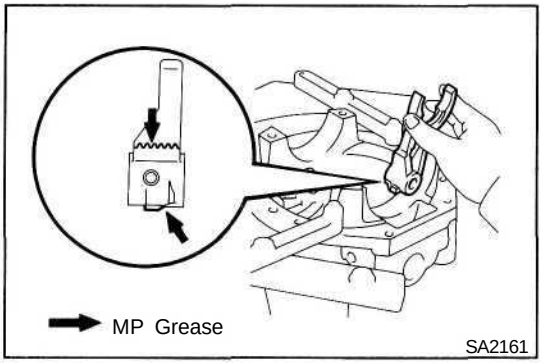

(w/ **DIFFERENTIAL LOCK)**

(a) Apply MP grease on the rack of the shift fork and connecting part of the indicator switch.

(b) Insert the shift fork into the differential carrier as shown.

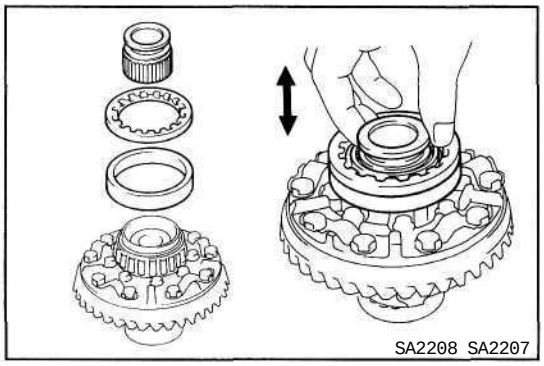

(c) Install both outer races, adjusting nuts and sleeve.

HINT: Check that the sleeve moves smothly.

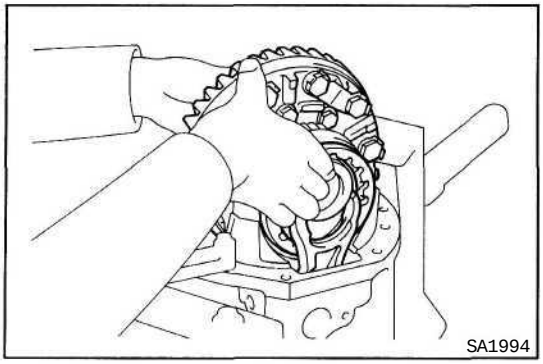

(d) Install the shift fork in the groove of the sleeve, holding it by hand, install the case in the carrier.

HINT: Make sure that there is backlash between the ring gear and drive pinion.

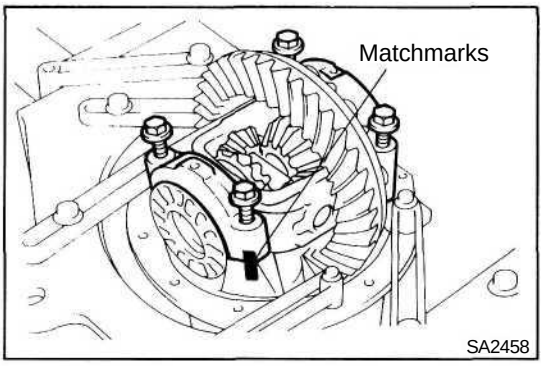

9. INSTALL BEARING CAPS

Align the matchmarks on the cap and carrier. Screw in the two bearing cap bolts two or three turns and press down the bearing cap by hand.

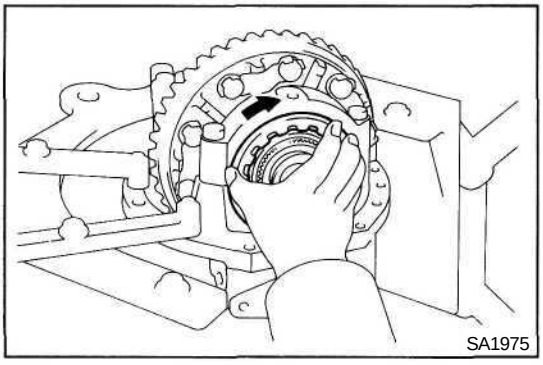

HINT: If the bearing cap does not fit tightly on the carrier, the adjusting nuts are not threaded properly.

Reinstall the adjusting nuts if necessary.

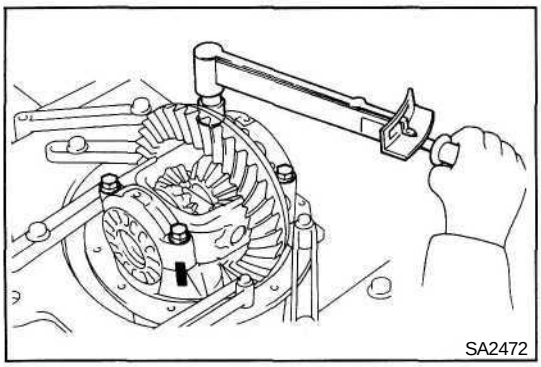

10. ADJUST SIDE BEARING PRELOAD

(a) Tighten the four bearing cap bolts to the specified torque, then loosen them to the point where they can be turned by hand.

Torque: 800 kg-cm **(58 ft-lb, 78 Nm)**

(b) Fully tighten the four bearing cap bolts by hand.

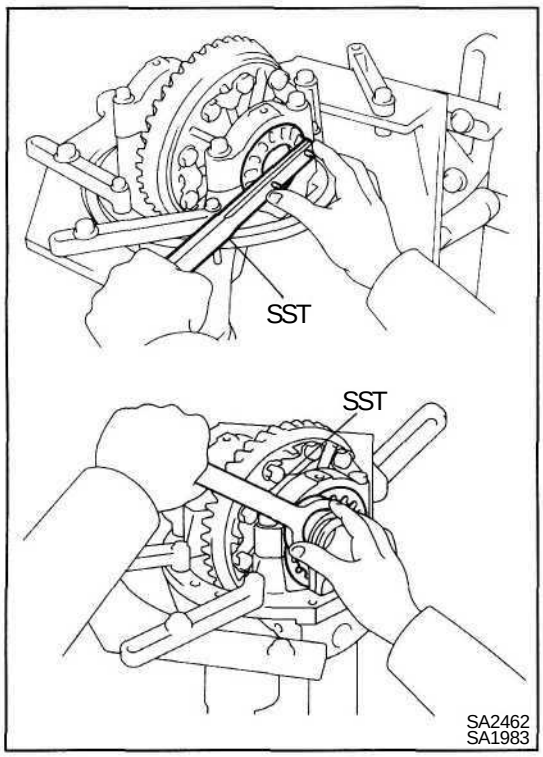

(c) Using SST, tighten the adjusting nut on the ring gear side until the ring gear has a backlash of about 0.2 mm (0.008 in.).

SST 09504-00011 or 09616-30020

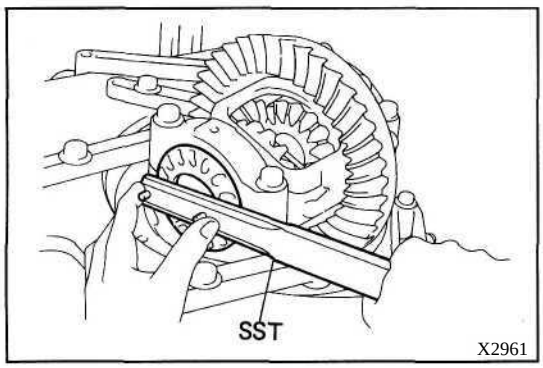

(d) While turning the ring gear, use SST to fully tighten the adjusting nut on the drive pinion side. After the bearings are settled, loosen the adjusting nut on the drive pinion side.

SST 09504-00011

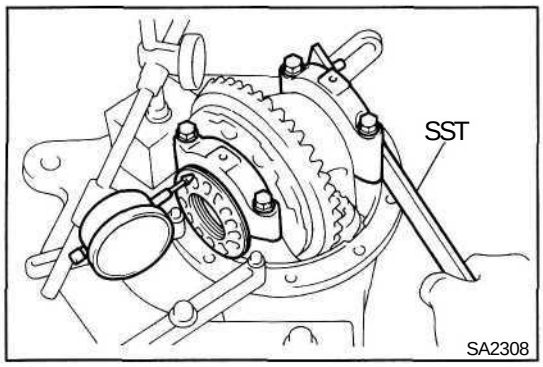

(e) Place a dial indicator on the top of the adjusting nut on the ring gear side.

(f) Adjust the side bearing for zero preload by tightening the other adjusting nut until the pointer on the indicator begins to move.

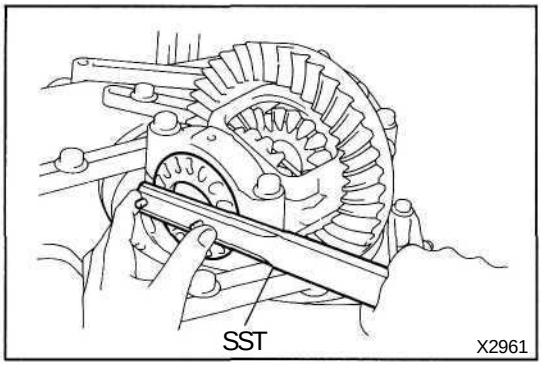

(g) Tighten the adjusting nut 1 — 1 V2 notches from the zero preload position.

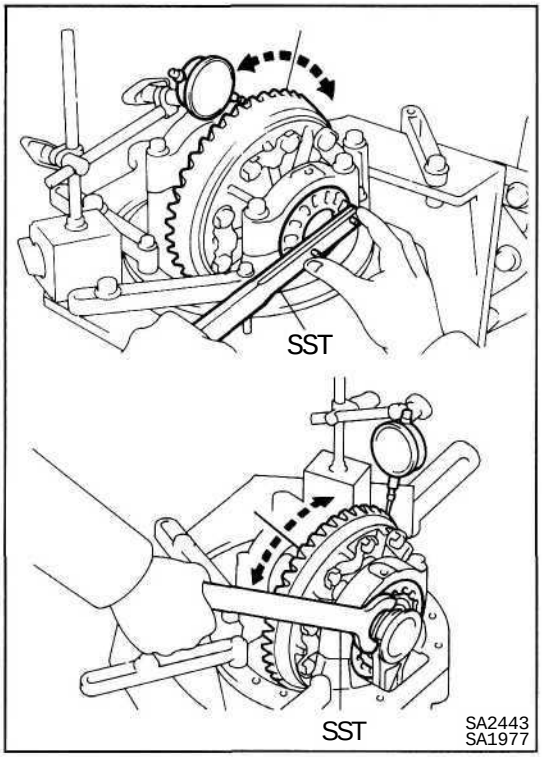

(h) Using a dial indicator, adjust the ring gear backlash until it is within specification.

Backlash: 0.13 - 0.18 mm (0.0051 - 0.0071 in.)

HINT: The backlash is adjusted by turning the left and right adjusting nuts equal amounts. For example, loosen the nut on the left side one notch and tighten the nut on the right side one notch.

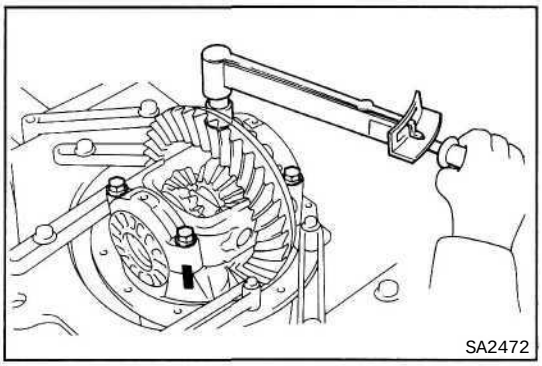

(i) Torque the bearing cap bolts.

Torque: 800 kg-cm (58 ft-lb, 78 N·m)

(j) Recheck the ring gear backlash.

Backlash: 0.13 - 0.18 mm (0.0051 - 0.0071 in.)

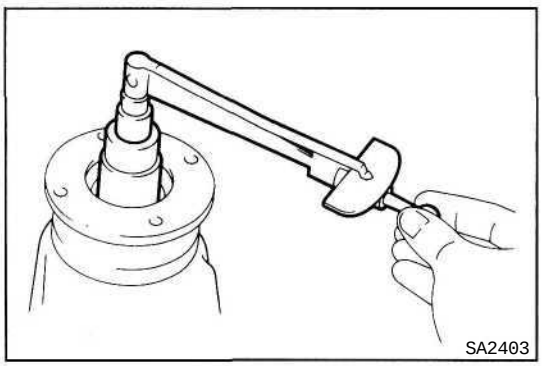

(k) Using a torque meter, measure the total preload.

Total preload (at starting):
Add drive pinion preload
4 — 6 kg-cm
(3.5 - 5.2 in.-lb, 0.4 - 0.6 N·m)

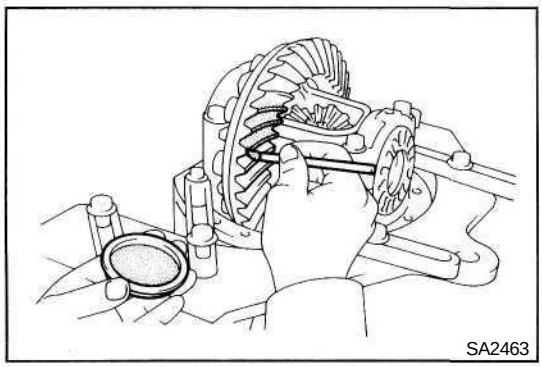

11. INSPECT TEETH CONTACT BETWEEN RING GEAR AND DRIVE PINION

(a) Coat 3 or 4 teeth at three different positions on the ring gear with red lead.

(b) Hold the companion flange firmly and rotate the ring gear in both directions.

(c) Inspect the teeth pattern.

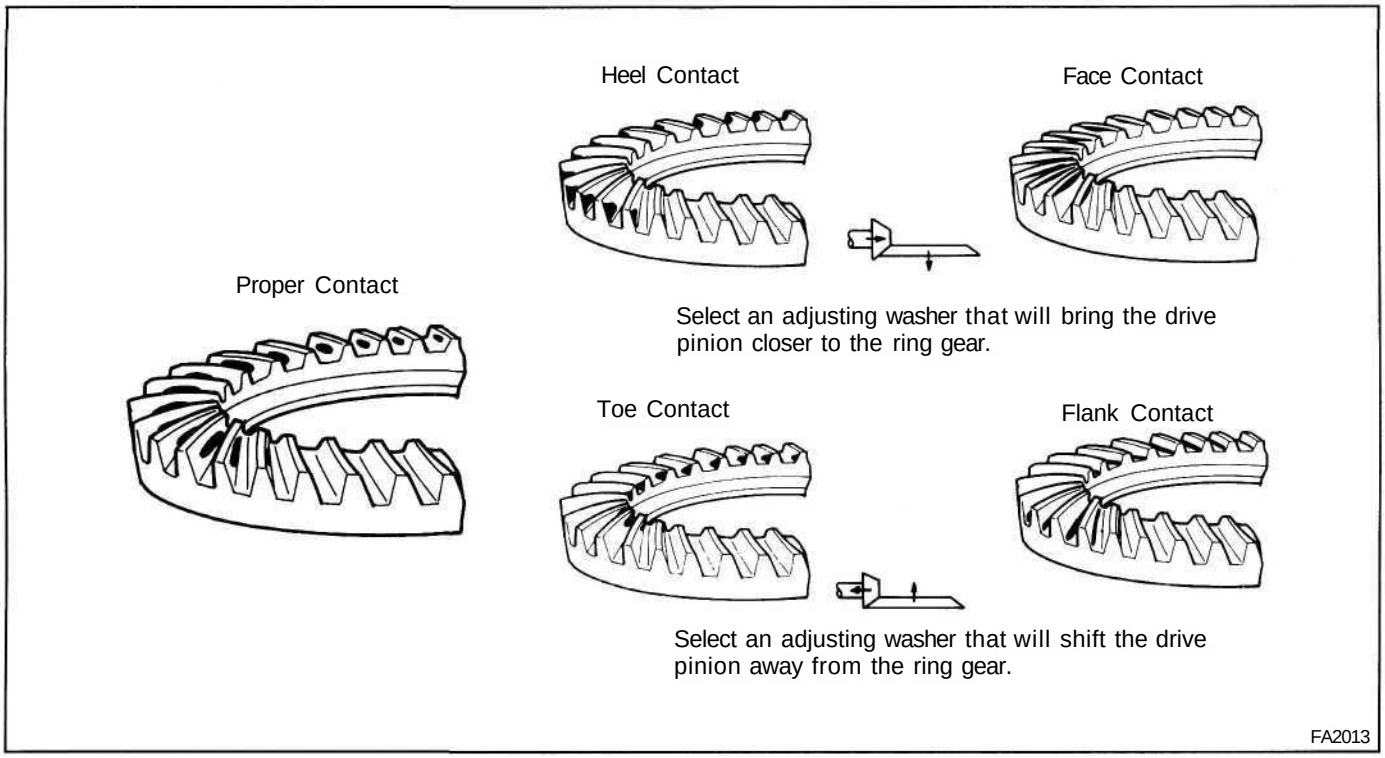

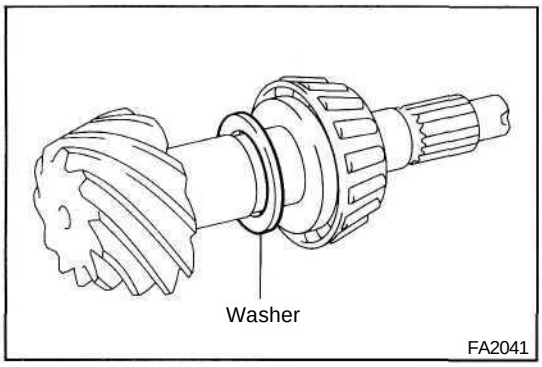

If the teeth are not contacting properly, use the following chart to select a proper washer for correction.

HINT: In the case of face contact or flank contact, it may be possible to make the adjustment within the backlash specification limits.

Washer thickness mm (in.)	
1.70 (0.0669)	2.03 (0.0799)
1.73 (0.0681)	2.06 (0.0811)
1.76 (0.0693)	2.09 (0.0823)
1.79 (0.0705)	2.12 (0.0835)
1.82 (0.0717)	2.15 (0.0846)
1.85 (0.0728)	2.18 (0.0858)
1.88 (0.0740)	2.21 (0.0870)
1.91 (0.0752)	2.24 (0.0882)
1.94(0.0764)	2.27 (0.0894)
1.97 (0.0776)	2.30 (0.0906)
2.00 (0.0787)	2.33 (0.0917)

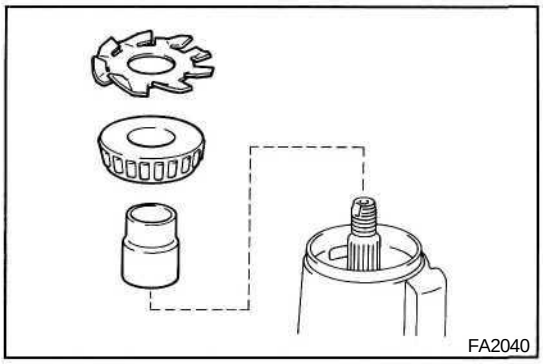

12. INSTALL NEW BEARING SPACER

(a) Remove the companion flange.
(See step 4 on page SA-45)

(b) Remove the oil slinger and rear bearing.
(See steps 5, 6 on pages SA-45, 46)

(c) Install a new bearing spacer.

(d) Install the rear bearing and oil slinger.

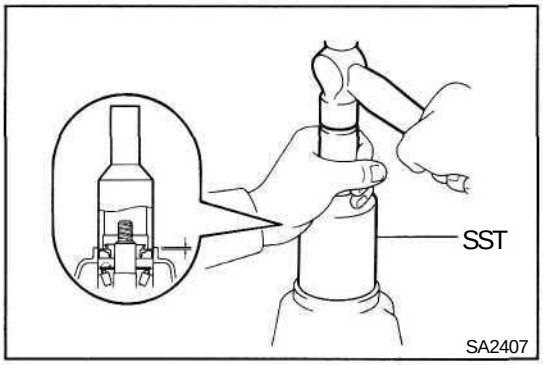

13. INSTALL OIL SEAL

(a) Using SST and a hammer, install a new oil seal.

SST 09214-76011

Oil seal drive in depth: 1.0 mm (0.039 in.)

(b) Coat the lip of oil seal with MP grease.

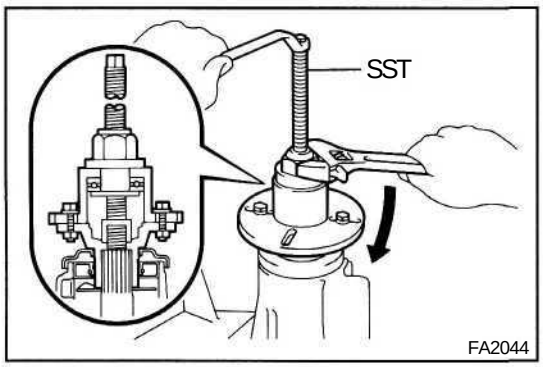

14. INSTALL COMPANION FLANGE

(a) Using SST, install the companion flange.

SST 09557-22022 (09557-22050)

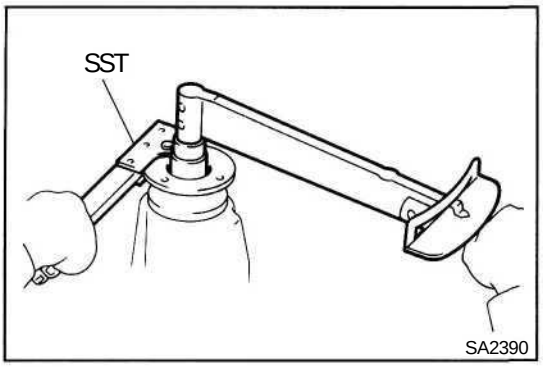

(b) Install the plate washer and a new nut.

HINT: Coat the threads of nut with gear oil.

(c) Using SST to hold the flange, tighten the nut.

SST 09330-00021

Torque: 2.000 kg-cm (145 ft-lb, 196 N·m)

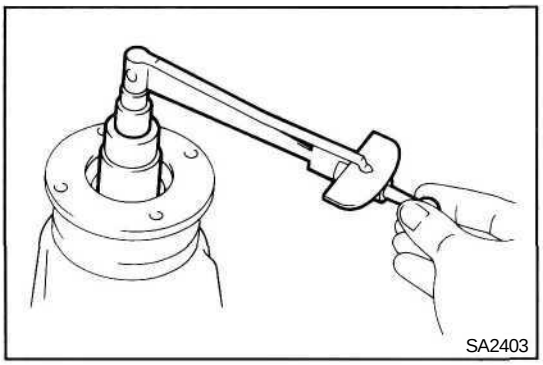

15. ADJUST DRIVE PINION PRELOAD

Using a torque meter, measure the preload of the backlash between the drive pinion and ring gear.

Preload (at starting):

New bearing

10 - 16 kg-cm
(8.7 - 13.9 in.-lb. 0.9 - 1.6 N·m)

Reused bearing

5 - 8 kg-cm (4.3 - 6.9 in.-lb, 0.5 - 0.8 N·m)

- If the preload is greater than specification, replace the bearing spacer.
- If the preload is less than specification, retighten the nut 130 kg-cm (9 ft-lb, 13 N-m) a little at a time until the specified preload is reached.

If the maximum torque is exceeded while retightening the nut, replace the bearing spacer and repeat the preload procedure. Do not back off the pinion nut to reduce the preload.

Maximum torque: 3,500 kg-cm (253 ft-lb, 343 N-m)

If everything is normal, coat the threads with gear oil, then repeat the above operation.

16. RECHECK RING GEAR BACKLASH
(See step 3 on page SA-42)

17. RECHECK TEETH CONTACT BETWEEN RING GEAR AND DRIVE PINION
(See step 11 on page SA-56)

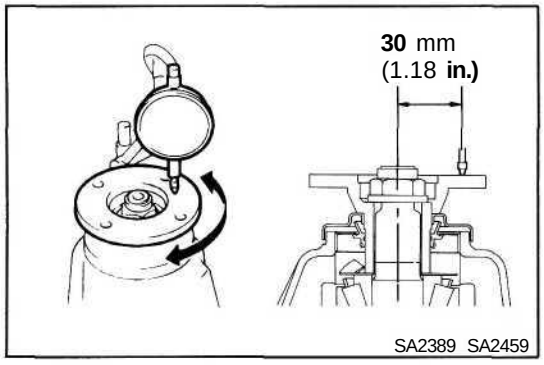

18. CHECK RUNOUT OF COMPANION FLANGE

Using a dial indicator, measure the vertical and lateral runout of the companion flange.

Maximum vertical runout: 0.10 mm (0.0039 in.)

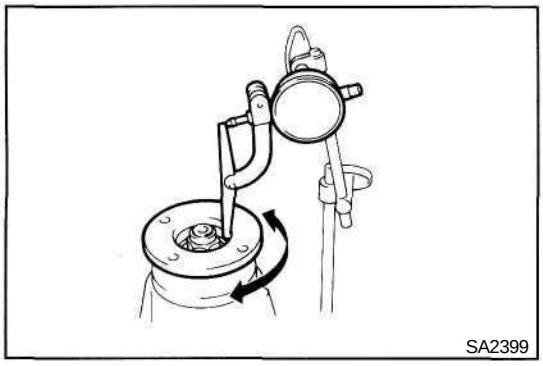

Maximum lateral runout: 0.10 mm (0.0039 in.)

If the runout is greater than the maximum, inspect the bearing.

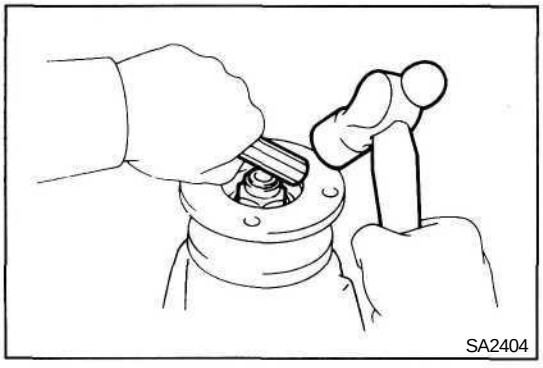

19. STAKE DRIVE PINION NUT

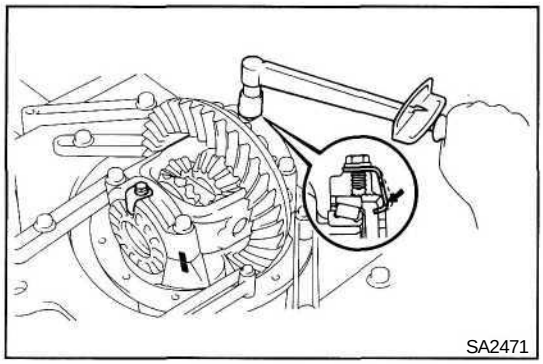

20. INSTALL ADJUSTING NUT LOCKS

(a) Install two new nut locks on the bearing caps.

Torque: 130 kg-cm (9 ft-lb, 13 N·m)

(b) After tightening bolts, the bend the nut locks.

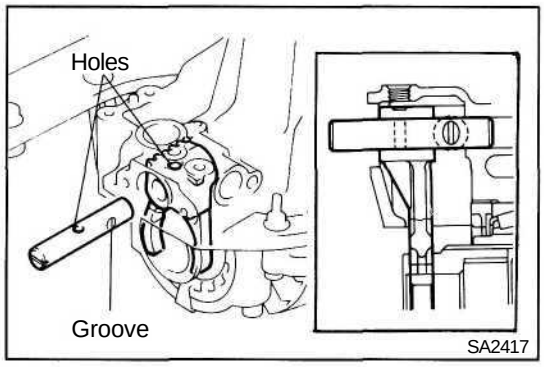

21. (w/ DIFFERENTIAL LOCK)
INSTALL SHIFT FORK SHAFT

(a) Apply MP gredse onto the outer circuit of the fork shaft.

(b) Install the fork shaft to match the hole of the shift fork and that of the shift fork shaft.

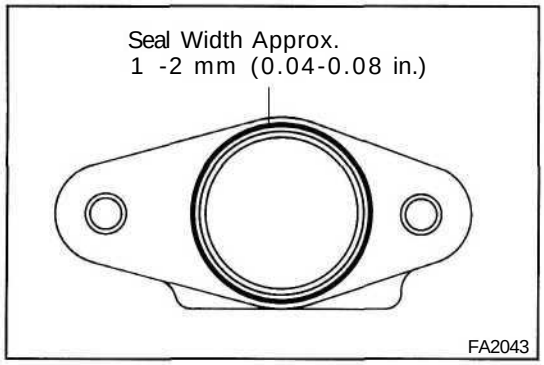

(c) Remove any packing material and be careful not to drop oil on the contacting surface of the differential carrier and shaft retainer.

(d) Apply seal packing to the carrier as shown.

Seal packing: Part No. 08826-00090, THREE BOND 1281 or equivalent

HINT: Install the shaft retainer within ten minutes after applying seal packing.

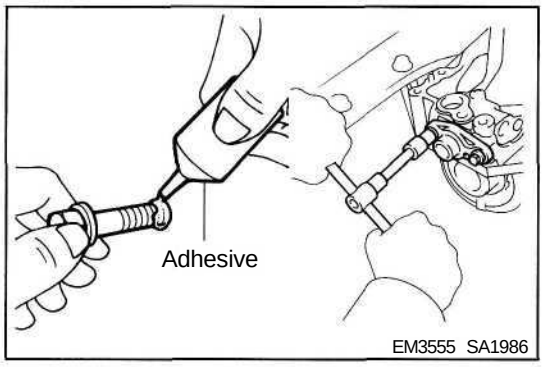

(e) Clean the threads of the bolts and retainer bolts holes with toluene or trichloroethylene.

(f) Apply adhesive to two or three threads of the mount bolt end.

Adhesive: Part No. 08833-00080, THREE BOND 1344, LOCTITE 242 or equivalent

(g) Tighten the shaft retainer with the two bolts.

Torque: 240 kg-cm (17 ft-lb, 24 N·m)

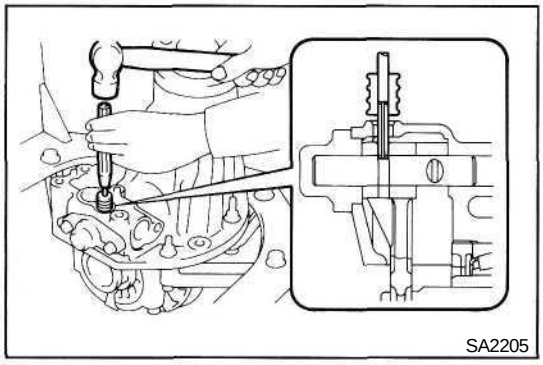

(h) Using a pin punch and hummer, drive in the slotted spring pin to the shift fork.

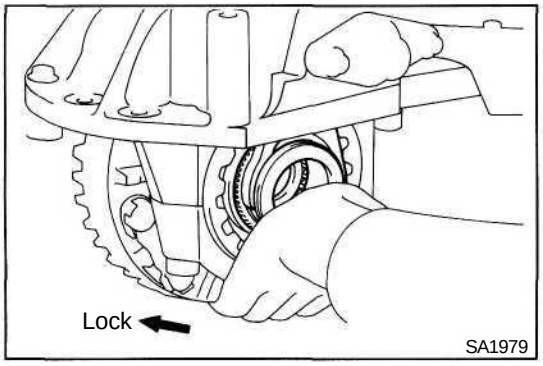

(i) Shift the fork deeply and keep the differential lock condition.

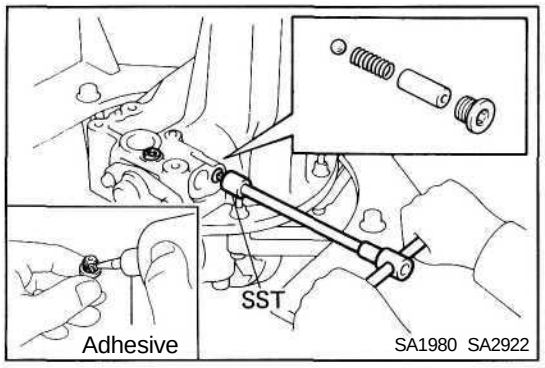

(j) Install the ball, compression spring and spring seat.

(k) Clean the threads of the two plugs and plug holes with toluene or thrichloroethylene.

(l) Apply adhesive to the plug threads.

Adhesive: Part No. 08833-00080, THREE BOND 1344, LOCTITE 242 or equivalent

(m) Using SST, install and tighten the screw plugs.

SST 09313-30021

Torque: 220 kg-cm (16 ft-lb, 22 N·m)

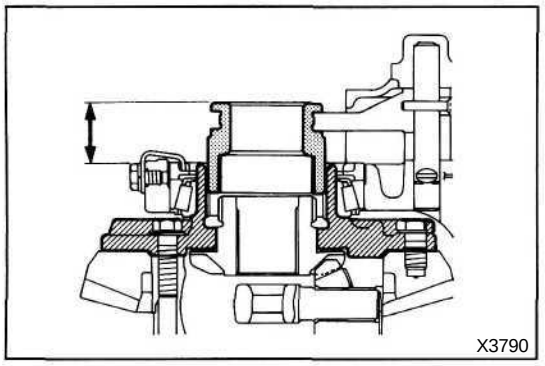

22. (w/ DIFFERENTIAL LOCK)
MEASURE DISTANCE BETWEEN SLEEVE AND DIFFERENTIAL CASE END SIDE

Measure the distance between the sleeve and tip of the differential case when differential is free and locked.

Standard distance:

LOCK 32.40 - 33.90 mm (1.2756 - 1.3346 in.)
FREE 17.44 - 18.86 mm (0.6866 - 0.7425 in.)

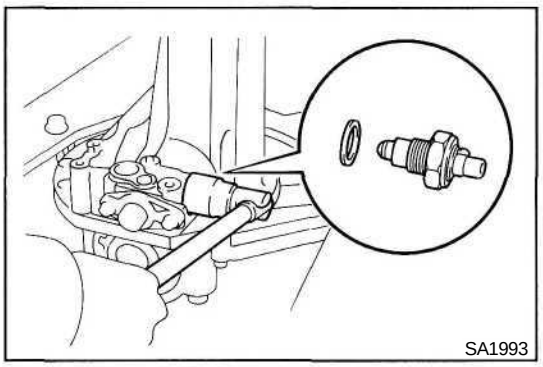

23. (w/ DIFFERENTIAL LOCK)
INSTALL INDICATOR SWITCH

Install the indicator switch with a new gasket.

Torque: 410 kg-cm (30 ft-lb, **40** IMm)

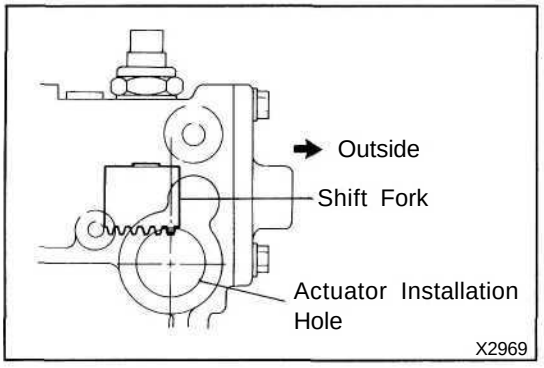

24. (w/ DIFFERENTIAL LOCK)
INSTALL ACTUATOR

(a) Check that the outermost rack tooth of the shift fork is virtually above the center line of the actuator installation hole.

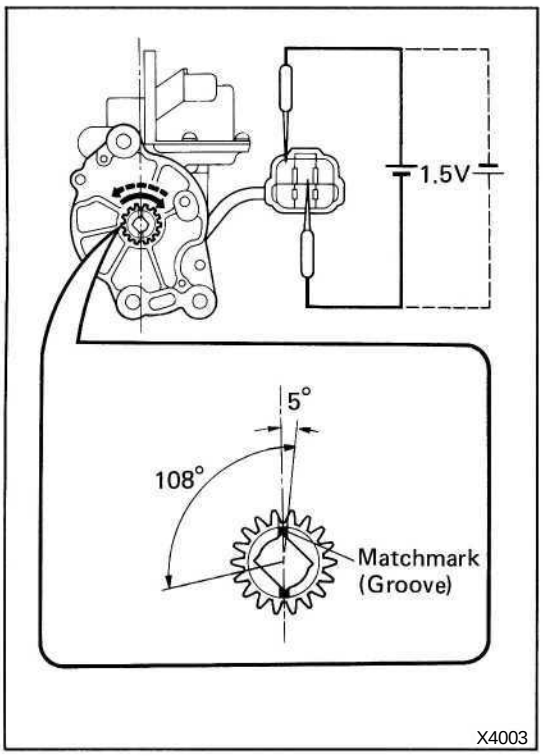

(b) Ensure that the matchmark of the pinion of the actuator is in the extent between 0 and 5 degrees clockwise above the center line of the actuator.

NOTICE:

- **If the matchmark is not in this extent, rotate the pinion to be matched.**
- **Don't supply the battery voltage directly between terminals.**
- **If the matchmark come to the extention limit of the rotation, don't electrify moreover.**

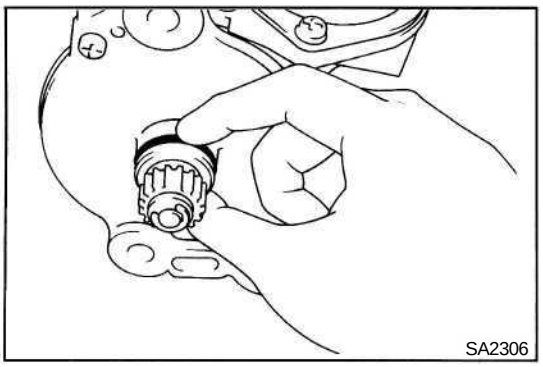

(c) Install a new O-ring to the actuator.

(d) Apply a light coat of gear oil on the O-ring.

(e) Apply MP grease to the gear part.

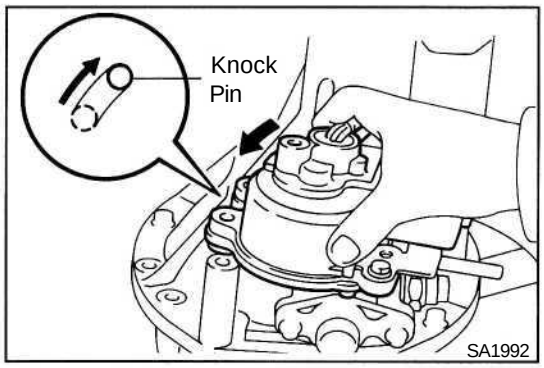

(f) Insert the actuator so that the long hole on the actuator side fits with the knock pin on the carrier side.

HINT: Don't damage the O-ring of the actuator.

(g) Align the actuator with the long hole and rotate the actuator counterclockwise when the knock pin reaches the right-hand side.

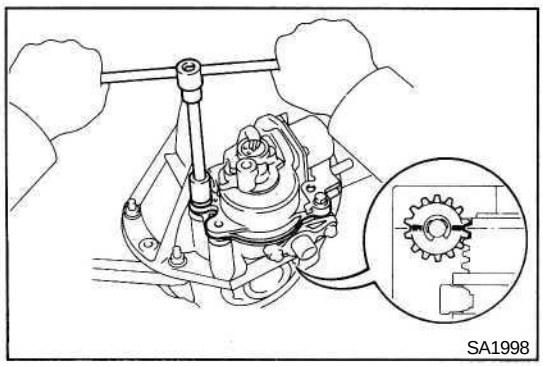

(h) Install the actuator to the differential carrier with bolt so that the outermost rack tooth of the shift fork shall fit the matchmark of the pinion of the actuator.

Torque: 270 kg-cm (20 ft-lb, 26 N·m)

Differential Case (2 Pinion Type)

COMPONENTS

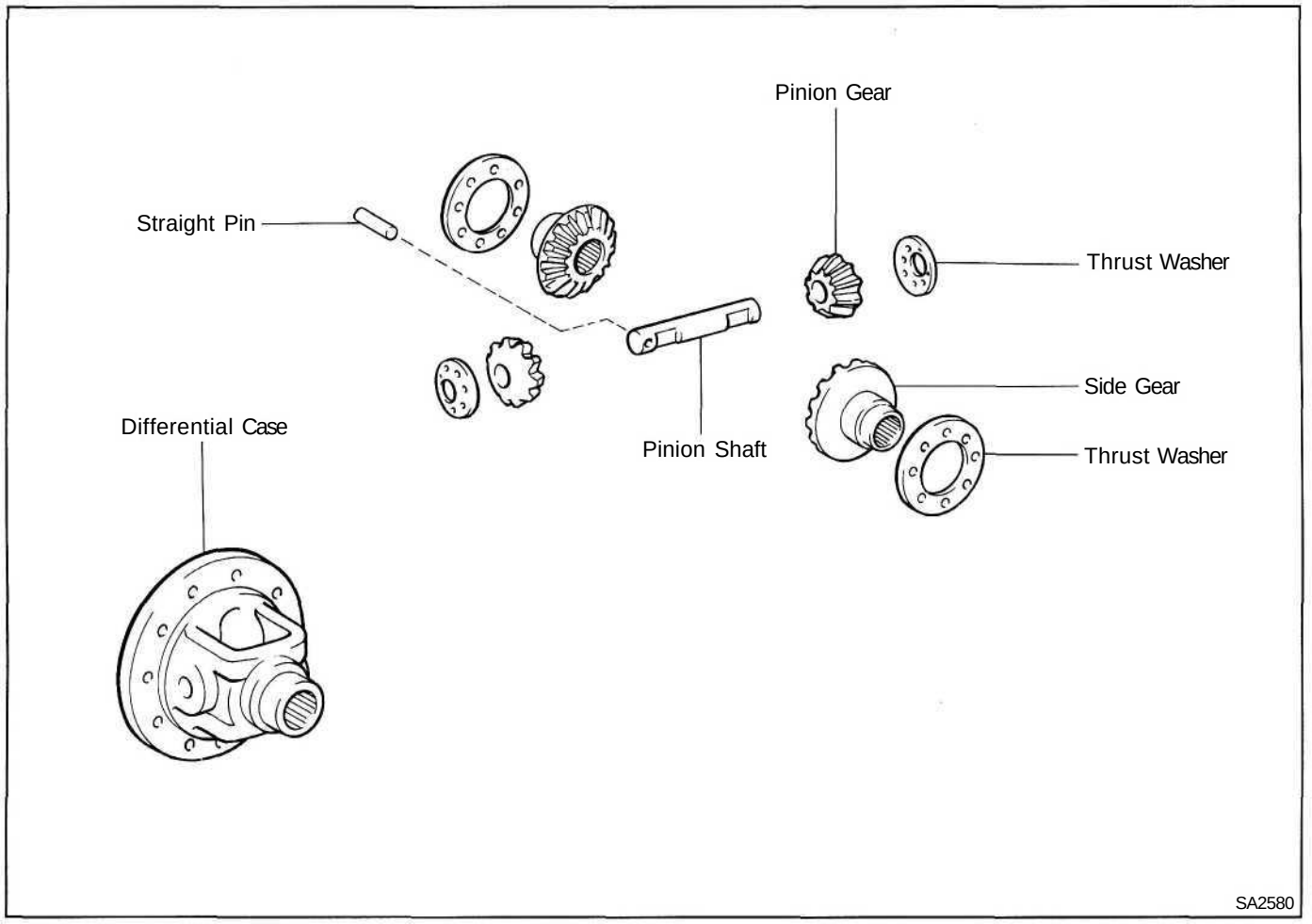

REMOVAL OF DIFFERENTIAL CASE

1. **REMOVE DIFFERENTIAL (See page SA-38)**
2. **REMOVE DIFFERENTIAL CASE FROM CARRIER (See page SA-41)**

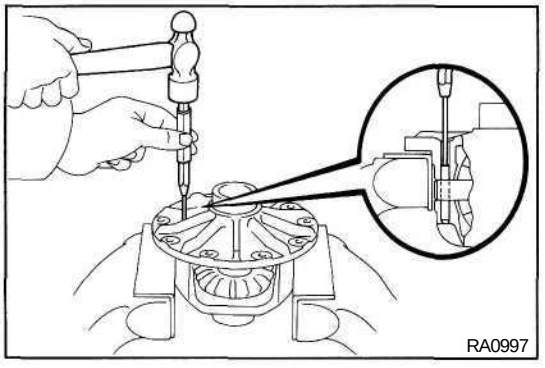

REPLACEMENT OF DIFFERENTIAL CASE COMPONENT PARTS

1. **DISASSEMBLE DIFFERENTIAL CASE**

   Using a hammer and punch, drive out the straight pin. Remove the pinion shaft, two pinion gears, two side gears and four thrust washers.

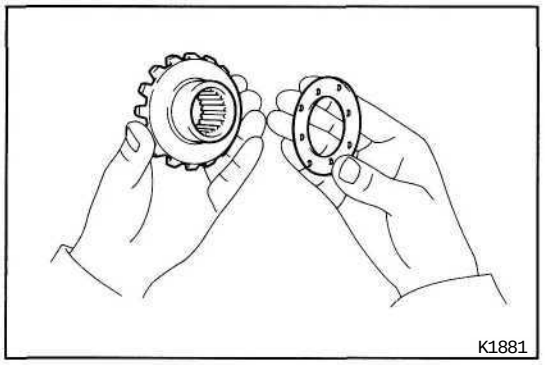

2. ASSEMBLE DIFFERENTIAL CASE

(a) Apply gear oil to each part.

(b) Install the proper thrust washers and side gears.

Using the table below, select thrust washers which will ensure that the backlash is within specification. Try to select washers of the same size for both sides.

Standard backlash: 0.05 — 0.20 mm (0.0020 - 0.0079 in.)

Thrust washer thickness mm (in.)
1.6 (0.063)
1.7 (0.067)
1.8 (0.071)

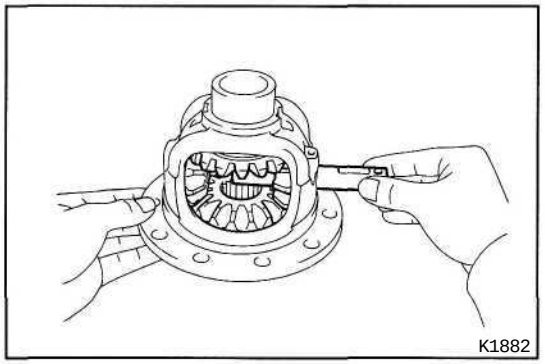

(c) Install thrust washers, side gears, pinion gears and pinion shaft in the differential case.

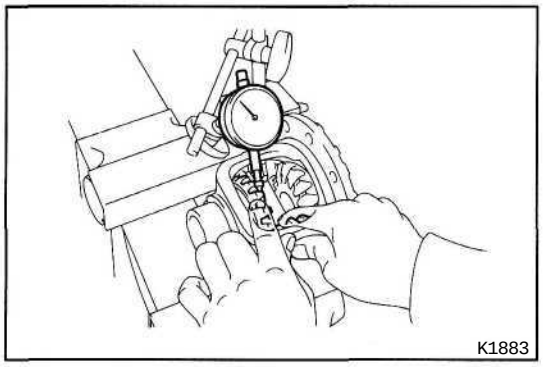

(d) Check the side gear backlash.

Measure the side gear backlash while holding one pinion gear toward the case.

Standard backlash: 0.05 — 0.20 mm (0.0020 - 0.0079 in.)

If the backlash is not within specification, install a thrust washer of different thickness.

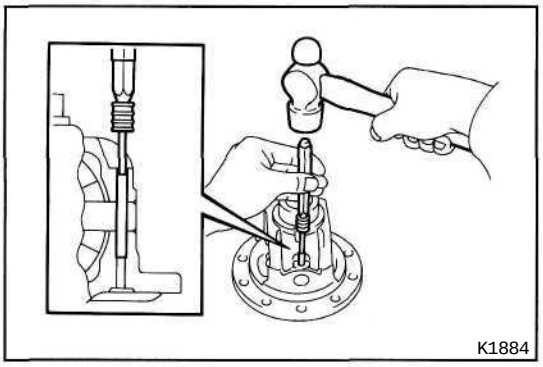

(e) Using a hammer and punch, install the straight pin through the case and hole of the pinion shaft.

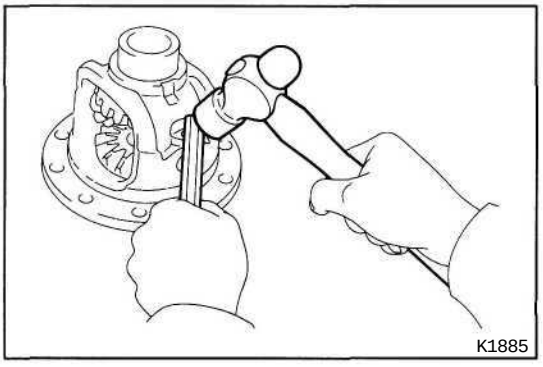

(f) Stake the differential case.

INSTALLATION OF DIFFERENTIAL

1. INSTALL DIFFERENTIAL CASE IN CARRIER
(See page SA-41)

2. INSTALL DIFFERENTIAL
(See page SA-38)

Differential Case (4 Pinion Type)

COMPONENTS

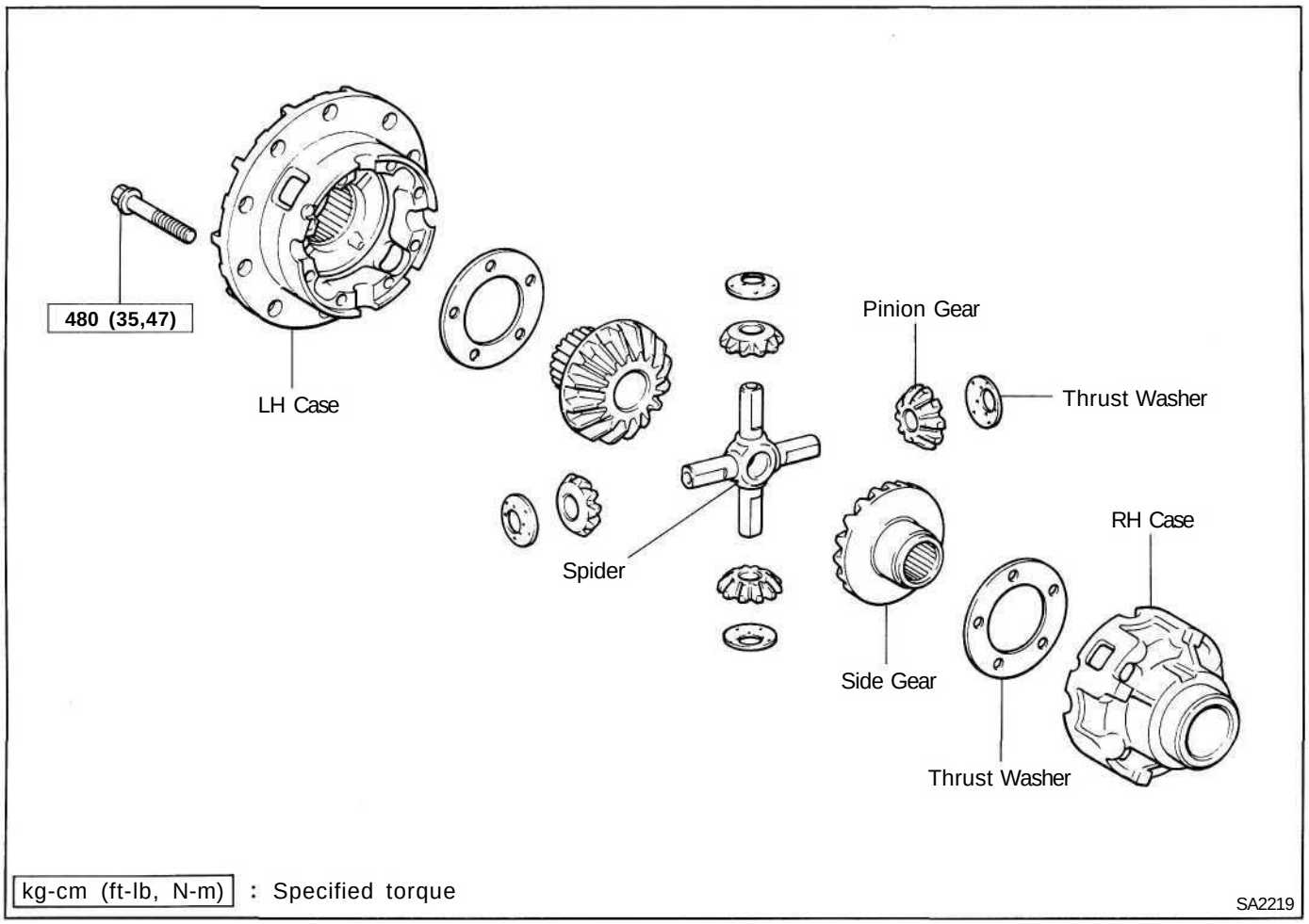

REMOVAL OF DIFFERENTIAL CASE

1. **REMOVE DIFFERENTIAL (See page SA-38)**
2. **REMOVE DIFFERENTIAL CASE FROM CARRIER (See page SA-41)**

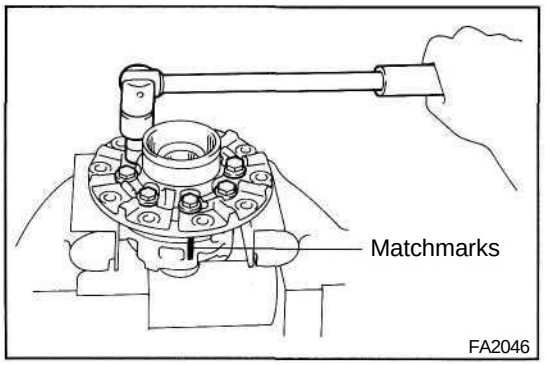

DISASSEMBLY OF DIFFERENTIAL CASE

1. **DISASSEMBLE DIFFERENTIAL CASE**
   (a) Place the matchmarks on the LH and RH cases.
   (b) Remove the eight bolts uniformly, a little at a time.
   (c) Using a plastic hammer, separate the LH and RH cases.

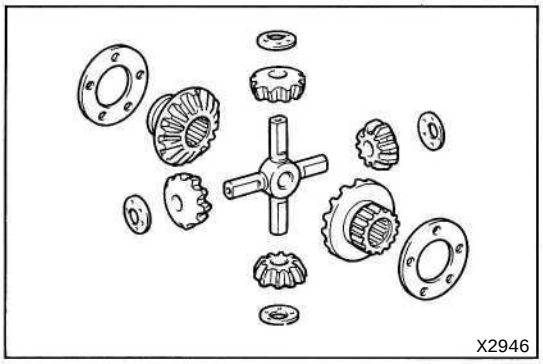

2. REMOVE FOLLOWING PARTS FROM CASE:

- Side gear (2 pieces)
- Side gear thrust washer (2 pieces)
- Spider
- Pinion gear (4 pieces)
- Pinion gear thrust washer (4 pieces)

ASSEMBLY OF DIFFERENTIAL CASE

1. MEASURE SIDE GEAR BACKLASH

(a) Apply gear oil to each part.

(b) Install the thrust washer to the side gear.

(c) Install the side gear to the RH case.

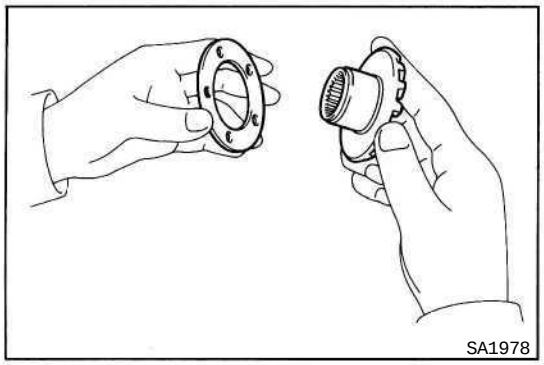

(d) Install the four pinion gears and thrust washers to the spider.

(e) Install the pinion gear and spider to the RH case.

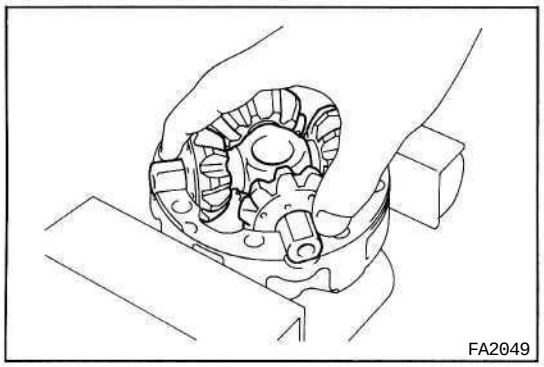

(f) Hold the side gear and spider, measure the side gear backlash.

Standard backlash: 0.05 — 0.20 mm (0.0020 - 0.0079 in.)

HINT:

- Measure at all four locations.
- Measure the backlash at the RH case at the LH case.

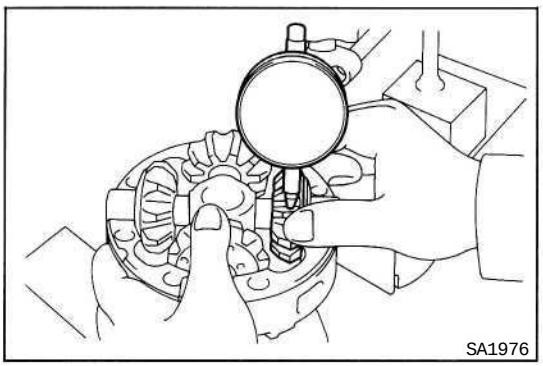

If the backlash is not within specification, install a thrust washer of a different thickness.

Thrust washer thickness mm(in.)	
0.9 (0.035) 1.0 (0.039) 1.1 (0.043)	1.2 (0.047) 1.3 (0.051)

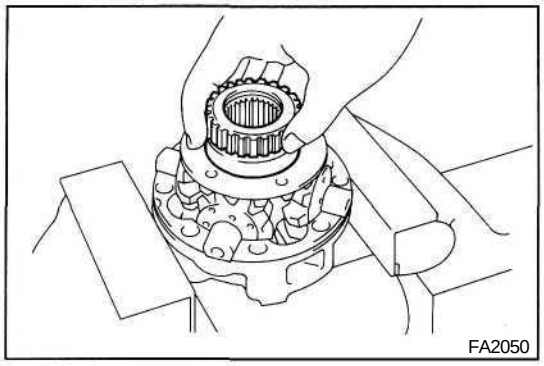

2. ASSEMBLE DIFFERENTIAL CASE

(a) Install the side gear and thrust washer to the RH case.

(b) Install the pinion gears and spider to the RH case.

(c) Install the side gear and thrust washer to the RH case.

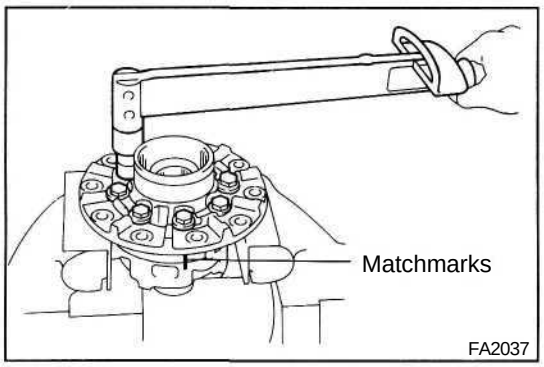

(d) Align the matchmarks on the LH and RH cases.

(e) Torque the eight bolts uniformly, a little at a time.

Torque: 480 kg-cm (35 ft-lb, 47 N-m)

INSTALLATION OF DIFFERENTIAL

1. INSTALL DIFFERENTIAL CASE IN CARRIER
(See page SA-41)

2. INSTALL DIFFERENTIAL
(See page SA-38)

FRONT SUSPENSION

COMPONENTS

700(51,69)
Cushion
Retainer
Spring Follow
Coil Spring
Shock Absorber
Stabilizer Bar
185 (13,18)
Retainer
Cushion
Bracket
260(19,25)
Retainer
Cushion
Retainer
Cushion
Retainer
700(51,69)
Cushion
Bracket
185 (13,18)
Lateral Control Rod Bushing
Lateral Control Rod
Lateral Control Rod Bushing
◆ 1,750(127,172)
◆ 1,750 (127,172)
Leading Arm Bushing
◆ 1,750(127,172)
Leading Arm
Leading Arm Bushing

kg-cm (ft-lb, N-m) : Specified torque
◆ Non-reusable part

SA2660

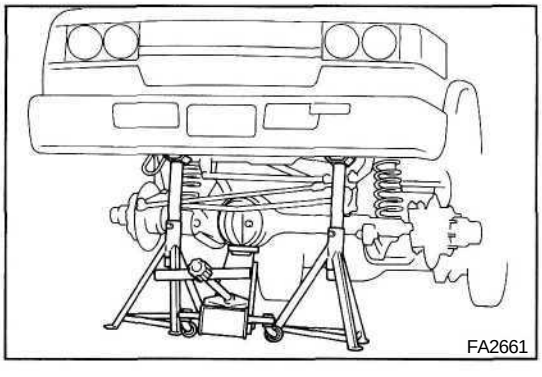

Coil Spring and Shock Absorber

REMOVAL OF COIL SPRING AND SHOCK ABSORBER

1. JACK UP AND SUPPORT BODY

Jack up and support the body on stands.

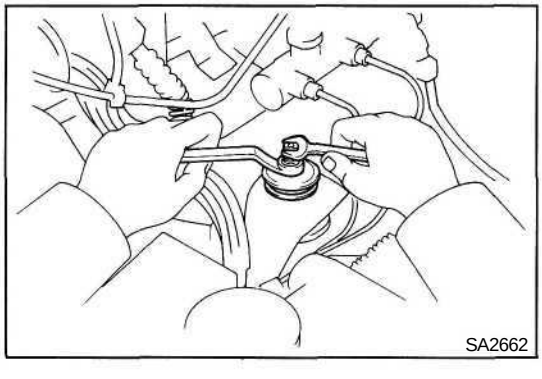

2. REMOVE FRONT SHOCK ABSORBER

(a) Jack up and support the axle housing.

(b) Hold the piston rod, and remove the upper mounting nut.

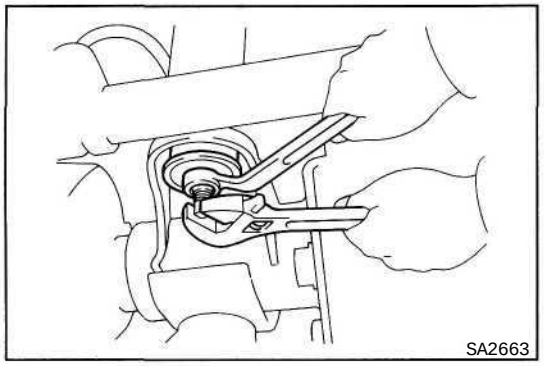

(c) Hold the shock absorber, and remove the lower mounting nut, shock absorber, cushions and retainer.

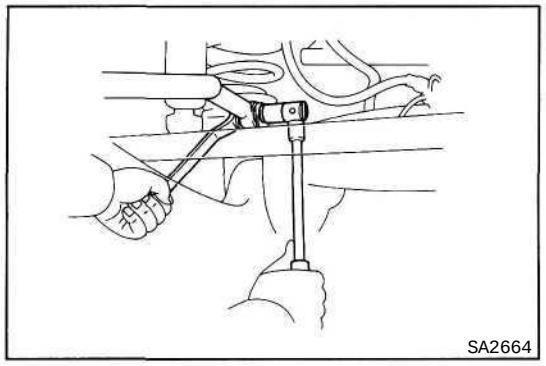

3. DISCONNECT STABILIZER BAR

Remove the bolt and nut, and disconnect the stabilizer bar with the cushion and bracket.

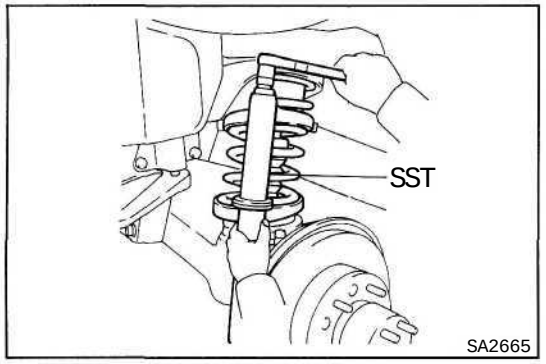

4. REMOVE COIL SPRING

(a) Jack down and support axle housing.

(b) Using SST, compress the coil spring.

SST 09727-30020

(c) Remove the coil spring.

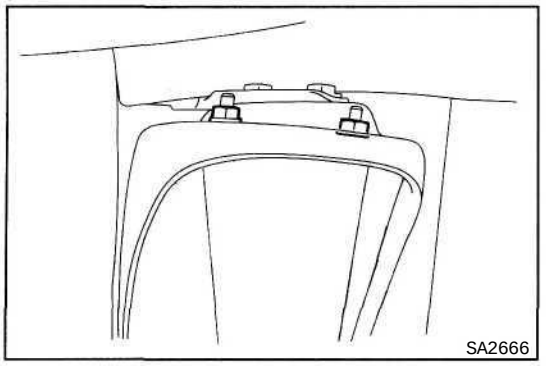

5. REMOVE SPRING FOLLOW

Remove the two nuts and the spring follow.

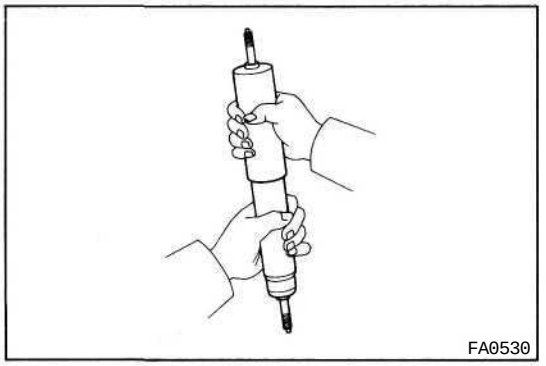

INSPECTION OF FRONT SHOCK ABSORBER

1. INSPECT OPERATION OF SHOCK ABSORBER

(a) While pushing the shock absorber, check that the pull throughout the stroke is even, and there is no abnormal resistance or noise.

(b) Push the shock absorber in fully and release it. Check that it returns at a contact speed throughout.

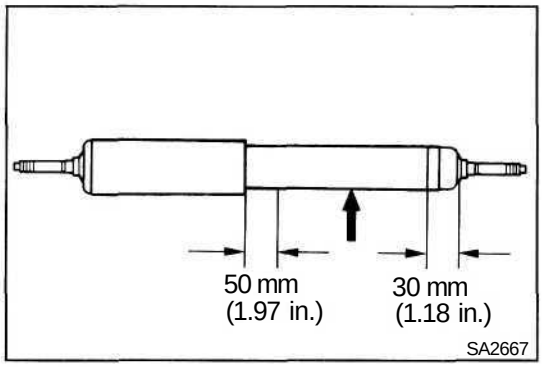

2. DISCARD SHOCK ABSORBER

Before discarding the shock absorber, drill a hole 2 — 3 mm (0.079 — 0.118 in.) in diameter at the location shown in the illustration to release the gas inside.

NOTICE:

- **When drilling, chips may fly out, so work carefully.**
- **The gas is colorless, odorless and non-poisonous.**

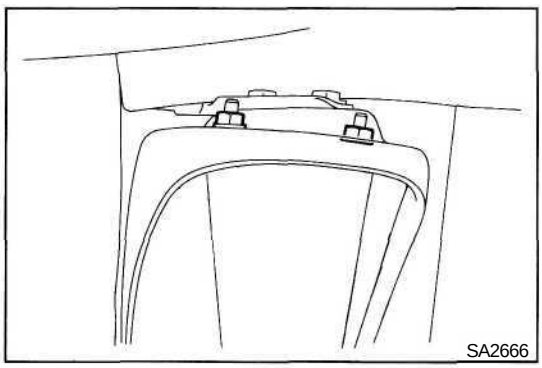

INSTALLATION OF COIL SPRING AND SHOCK ABSORBER

(See page SA-67)

1. INSTALL SPRING FOLLOW

Install the spring follow to the body with the two nuts.

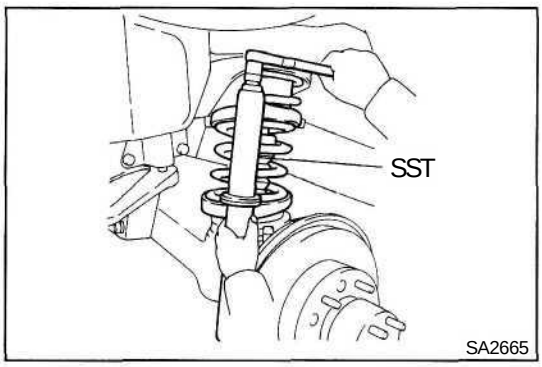

2. INSTALL COIL SPRING

(a) Using SST, compress the coil spring.

SST 09727-30020

(b) Install the coil spring with SST in position.

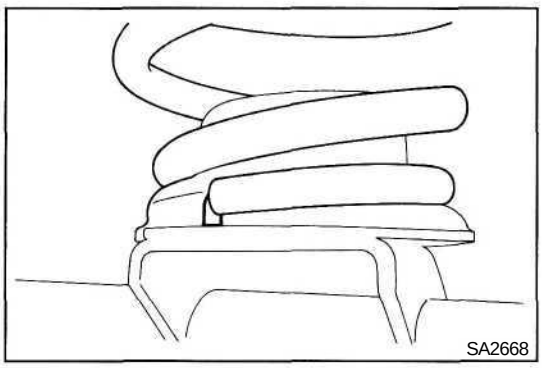

(c) Align the coil spring end with the lower seat and install.

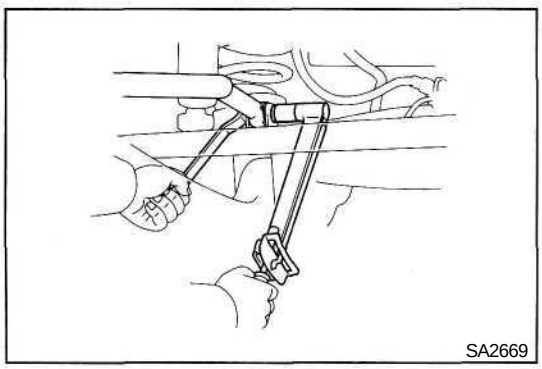

3. CONNECT STABILIZER

(a) Jack up and support axle housing.

(b) Connect the stabilizer bar to the axle housing with the bolts and nuts.

HINT: Insert the bolt from the outside.

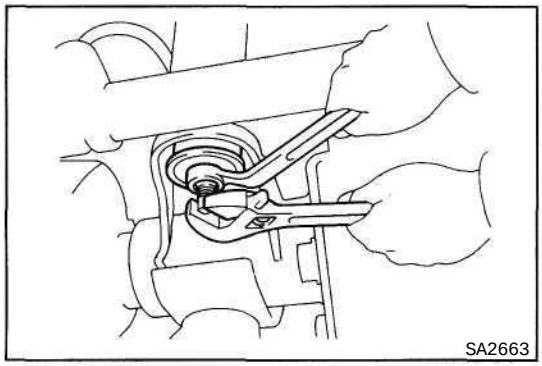

4. INSTALL SHOCK ABSORBER

(a) Install the retainers, cushions and the shock absorber.

(b) Hold the shock absorber to the axle housing with the lower mounting nut.

Torque: 700 kg-cm (51 ft-lb, 69 N·m)

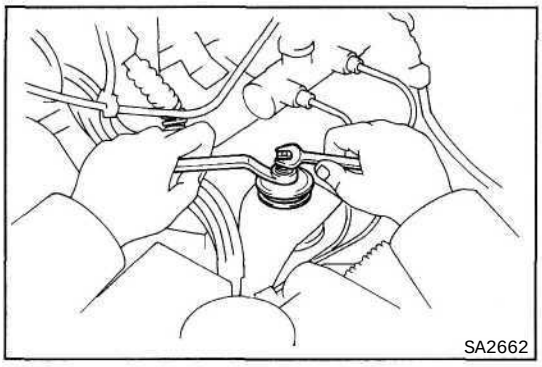

(c) Install the cushions and the retainers.

(d) Hold the piston rod to the body with the upper mounting nut.

Torque: 700 kg-cm (51 ft-lb, 69 N·m)

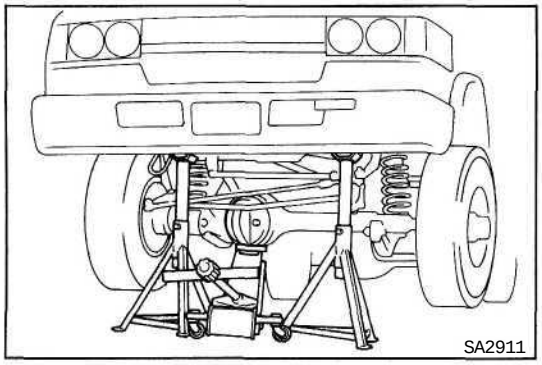

Stabilizer Bar

REMOVAL OF STABILIZER BAR

(See page SA-67)

1. JACK UP AND SUPPORT VEHICLE WITH FRAME

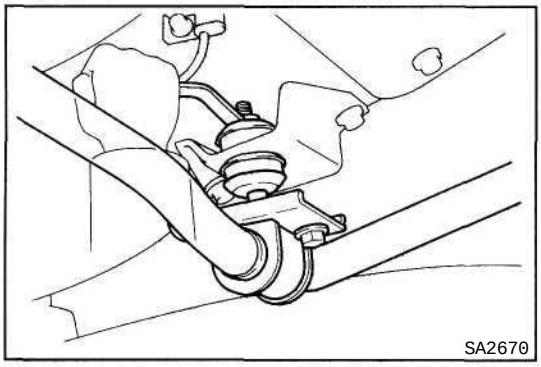

2. REMOVE STABILIZER BAR

(a) Remove the nut and disconnect the stabilizer bar with the bracket and cushion from the frame.

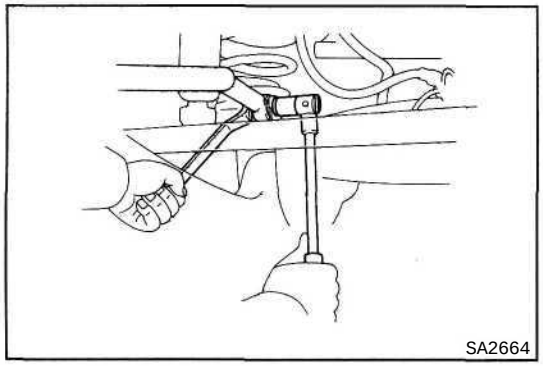

(b) Remove the bolt and nut, and remove the stabilizer bar from the axle housing.

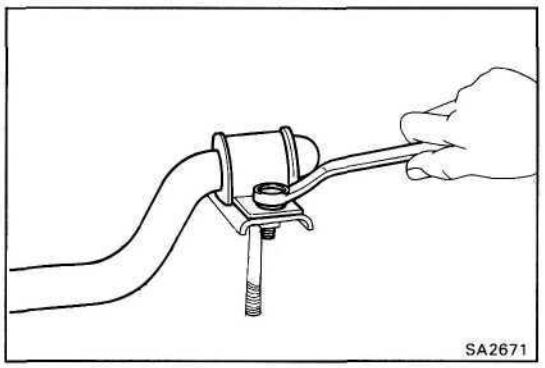

(c) Remove the two bolts, bracket and cushion from the stabilizer bar.

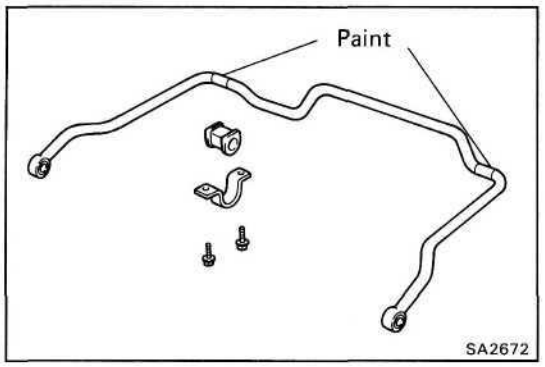

INSTALLATION OF STABILIZER BAR

(See page SA-67)

1. INSTALL STABILIZER BAR

(a) Install the cushions on the lines painted on the stabilizer bar and install the brackets onto cushions.

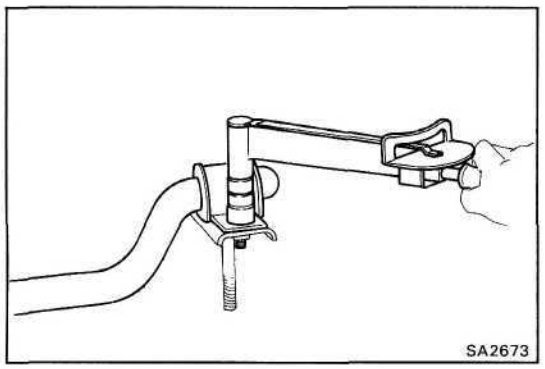

(b) Install the brackets to stabilizer bar with four bolts.

Torque: 185 kg-cm (13 ft-lb, 18 N·m)

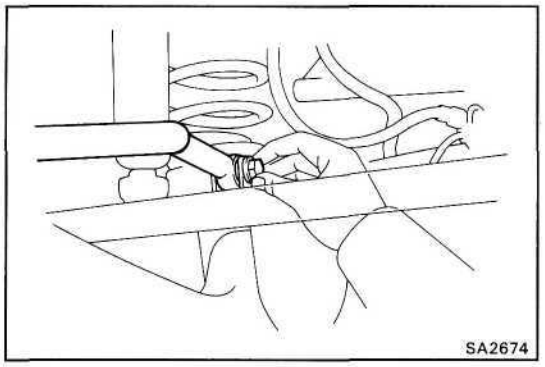

(c) Install the stabilizer bar with brackets and cushions to the axle housing with the bolts and nuts.

HINT: Insert the bolt from the outside.

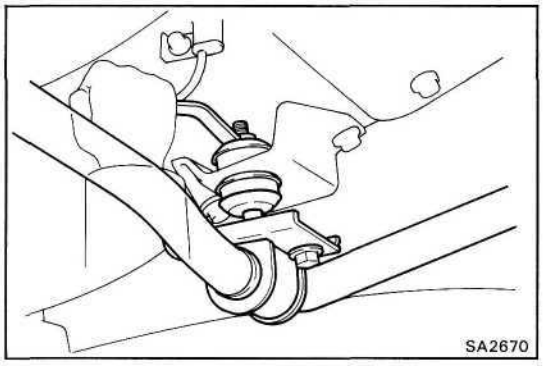

(d) Temporarily install the stabilizer brackets to the frame with the cushions, retainers and nuts.

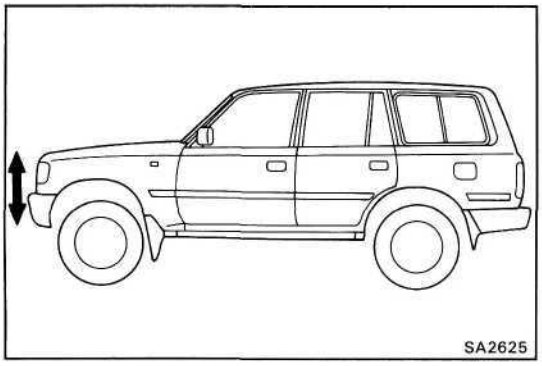

2. STABILIZE SUSPENSION

Lower the vehicle and bounce the vehicle up and down to stabilize the suspension.

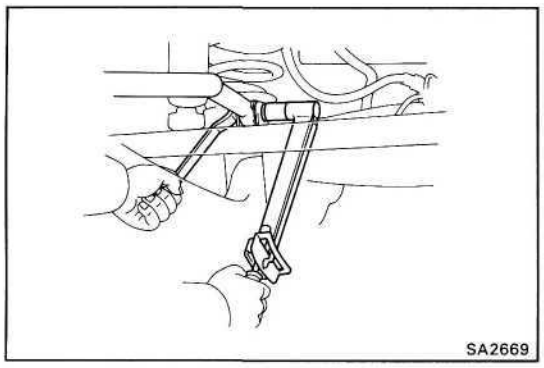

3. TORQUE STABILIZER BAR MOUNTING BOLT AND NUT

(a) Torque the bolts and nuts.

Torque: 260 kg-cm (19 ft-lb, 25 N·m)

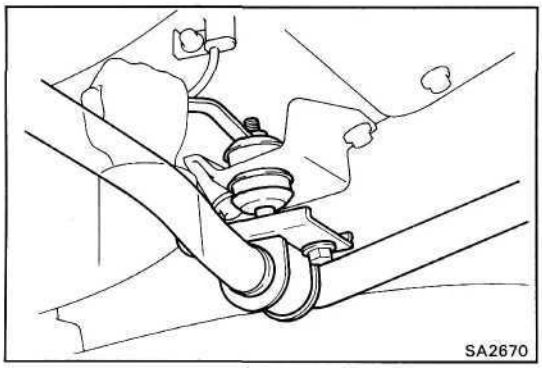

(b) Torque the nuts.

Torque: 185 kg-cm (13 ft-lb, 18 N·m)

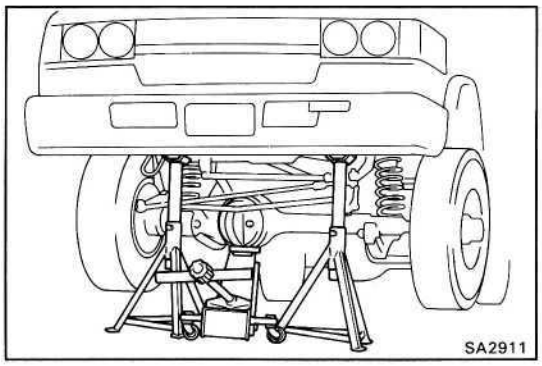

Lateral Control Rod

(See page SA-67)

REMOVAL OF LATERAL CONTROL ROD

1. JACK UP AND SUPPORT BODY

Jack up and support the body on the stands.

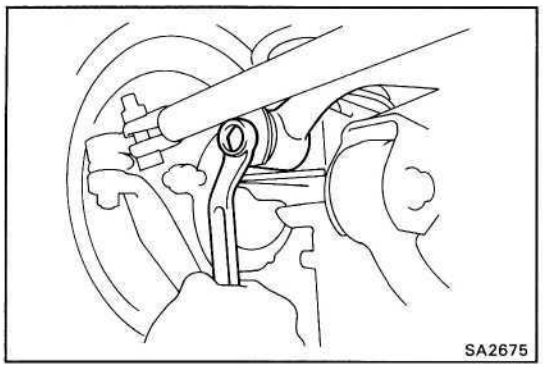

2. DISCONNECT LATERAL CONTROL ROD FROM AXLE HOUSING

Remove the nut, and disconnect the lateral control rod from the front axle housing.

HINT: Hold the lateral control rod with a jack.

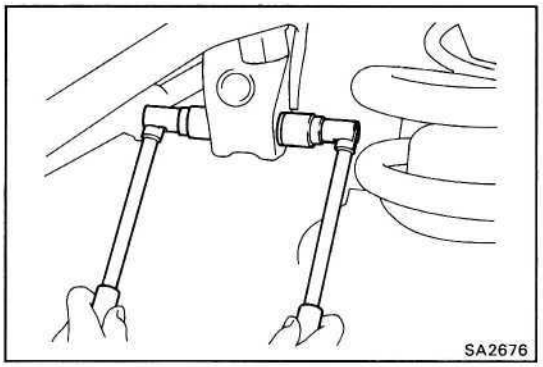

3. DISCONNECT LATERAL CONTROL ROD FROM FRAME

Remove the bolt, nut and the lateral control rod.

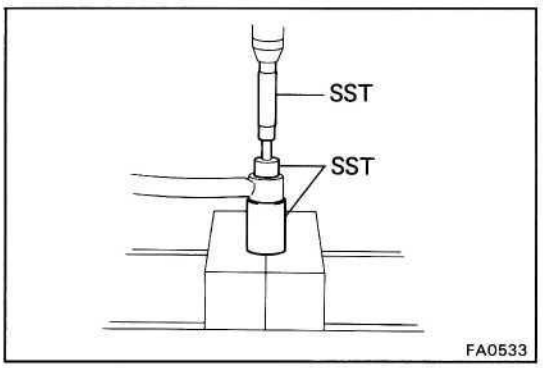

REPLACEMENT OF LATERAL CONTROL ROD BUSHING

1. REMOVE BUSHING

Using SST and a press, press out the bushing from the lateral control rod.

SST 09710-22041
(09710-02020, 09710-02050, 09710-02070)

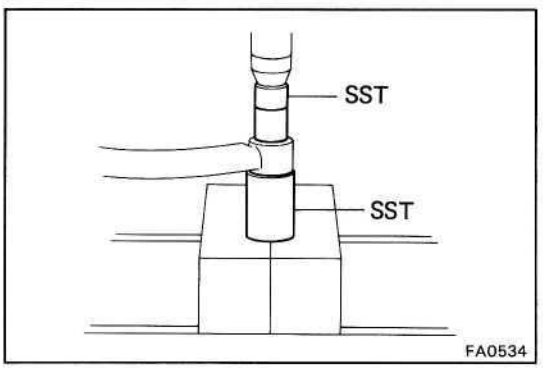

2. INSTALL BUSHING

Using SST and a press, press a new bushing into the lateral control rod.

SST 09710-22041 (09710-02050, 09710-02070)

HINT: Do not lubricant when pressing in the bushing.

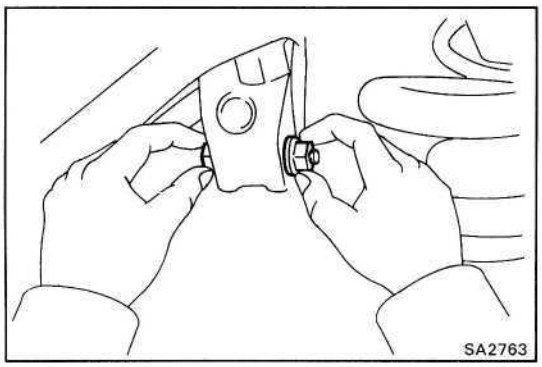

INSTALLATION OF LATERAL CONTROL ROD

(See page SA-67)

1. INSTALL LATERAL CONTROL ROD TO FRAME

Temporarily install the lateral control rod to the frame with the bolt and nut.

HINT: Insert the bolt from the front side.

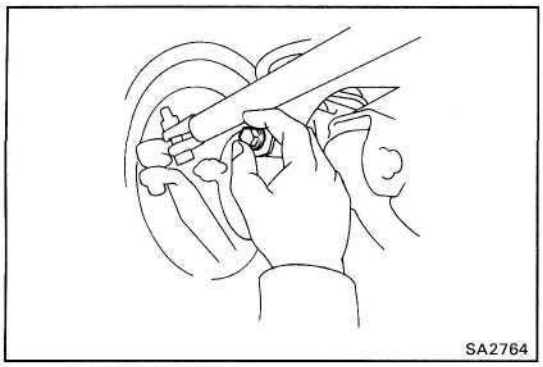

2. CONNECT LATERAL CONTROL ROD TO AXLE HOUSING

Temporarily connect the lateral control rod to the axle housing with the bolt.

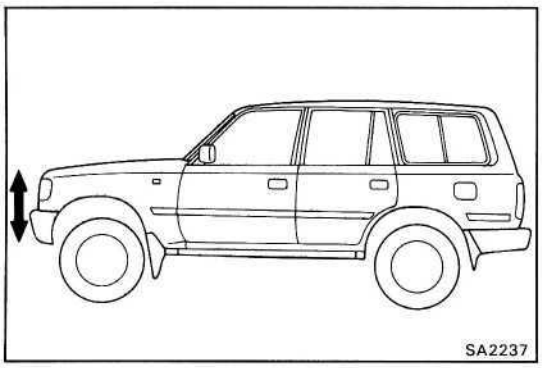

3. STABILIZE SUSPENSION

Lower the vehicle and bounce the vehicle up and down to stabilize the suspension.

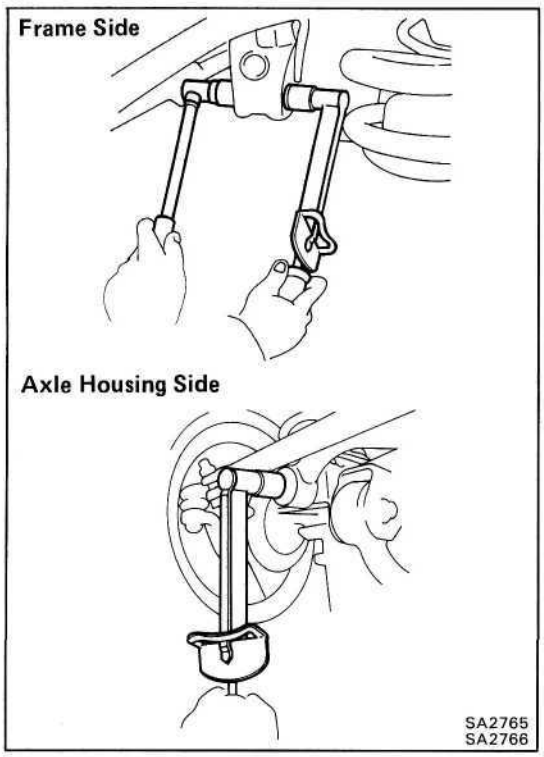

4. TORQUE BOLTS AND NUT

(a) Jack up the axle housing.

(b) Torque the bolts and nut.

Torque: 1,750 kg-cm **(127 ft-lb, 172 N·m)**

HINT: When tightening the lateral control rod set nut and bolt, lower the vehicle load until the lateral control rod is horizontal.

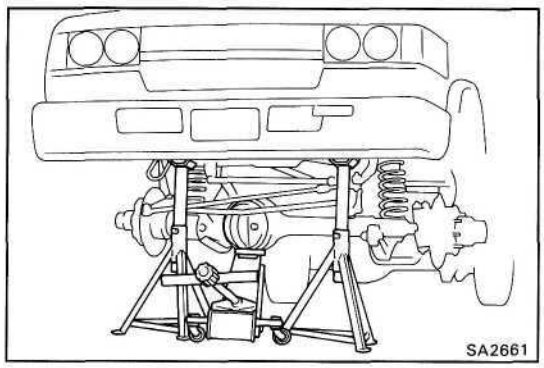

Leading Arm

(See page SA-67)

REMOVAL OF LEADING ARM

1. JACK UP VEHICLE

Jack up the and support the frame with stands.

Hold the front axle housing with a jack.

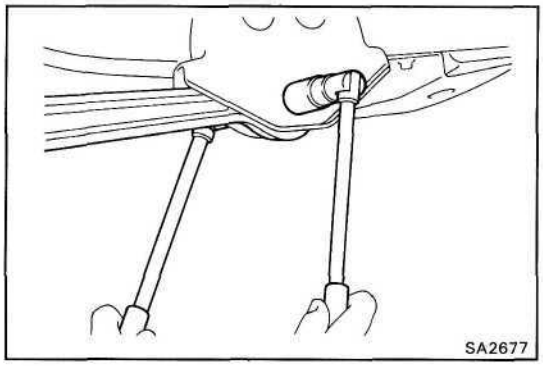

2. REMOVE LEADING ARM

(a) Remove the bolt and nut of the frame side.

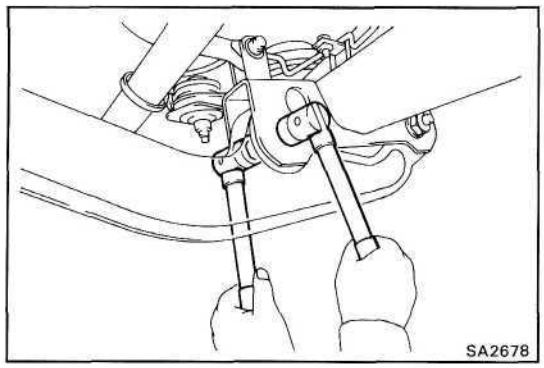

(b) Remove the two bolts and nuts of the axle housing side, then remove the leading arm.

REPLACEMENT OF LEADING ARM BUSHING

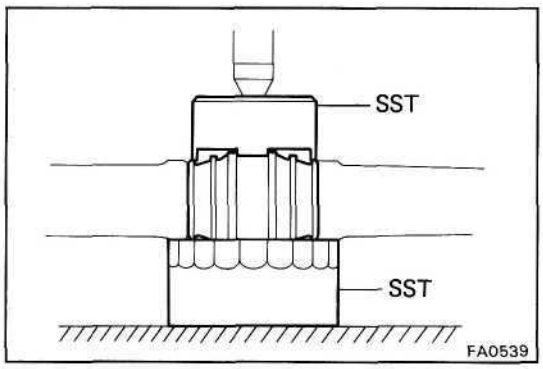

1. REMOVE BUSHINGS

Using SST and a press, press out the bushings from the leading arm.

SST 09228-22020, 09710-30030 (09710-03180)

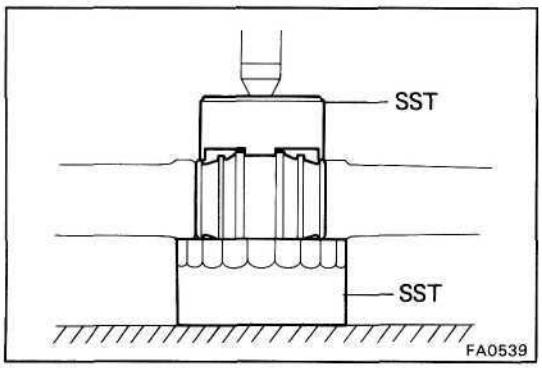

2. INSTALL BUSHINGS

Using SST and a press, press a new bushing into the leading arm.

SST 09228-22020, 09710-30020 (09710-03180)

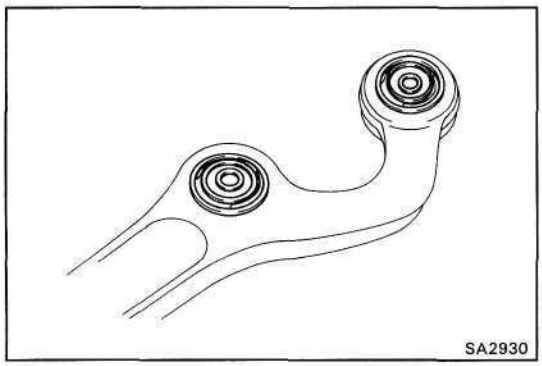

HINT: When assembling the bushing, assemble it so its slits are vertical.

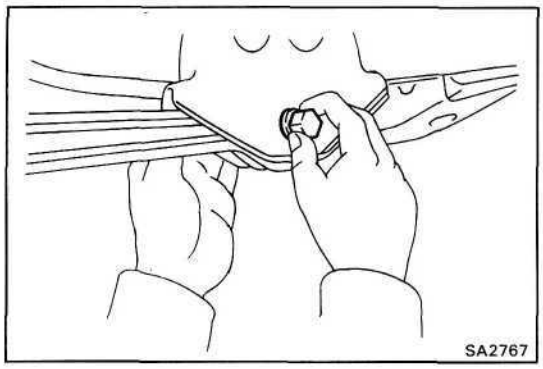

INSTALLATION OF LEADING ARM

(See page SA-67)

1. INSTALL LEADING ARM TO FRAME

Temporarily install the leading arm to the body with the bolt and nut.

HINT: Insert the bolt from the outside.

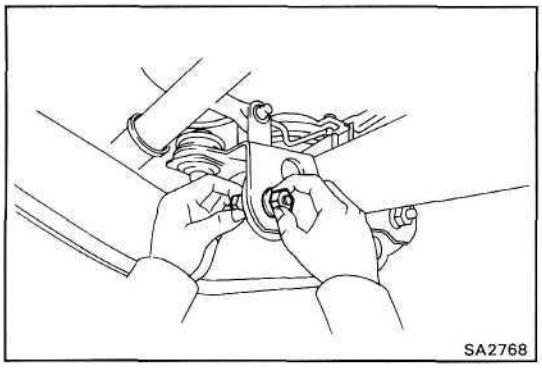

2. INSTALL LEADING ARM TO AXLE HOUSING

Temporarily connect the leading arm to the axle housing with the two bolts and nuts.

HINT: Insert the bolts from the outside.

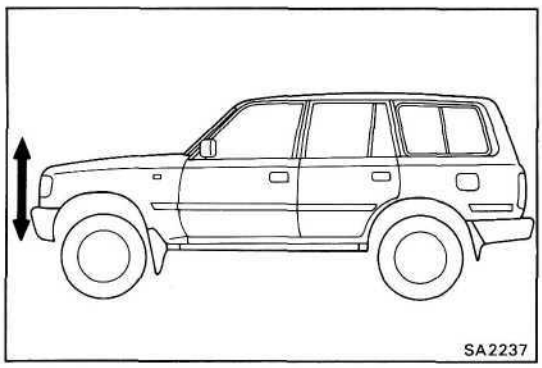

3. STABILIZE SUSPENSION

Lower the vehicle and bounce the vehicle up and down to stabilize the suspension.

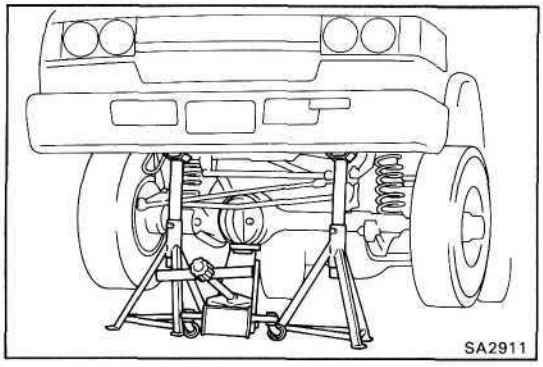

4. TORQUE NUTS

(a) Jack up the axle housing.

HINT: For safety, place stands under either side of the vehicle's frame.

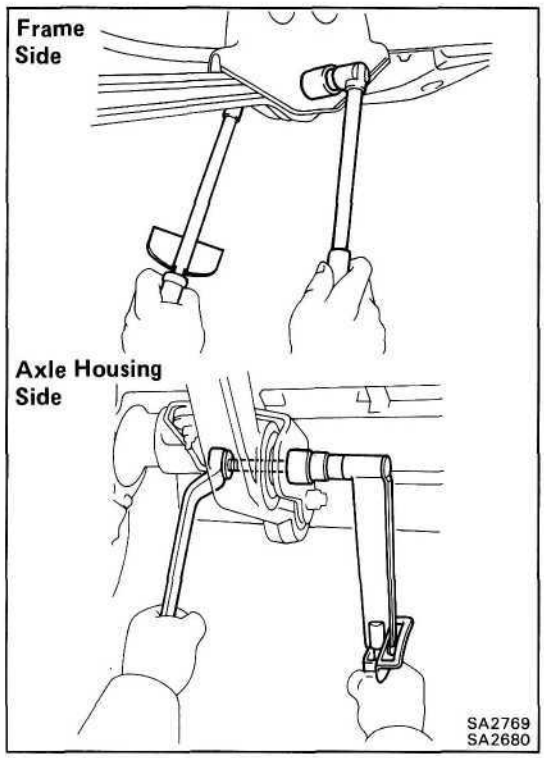

(b) Torque the nuts.

Torque: 1,750 kg-cm (127 ft-lb, 172 N·m)

HINT: When tightening the nuts, tighten with the vehicle's full weight applied to the axle housing.

REAR AXLE SHAFT
(Semi-Floating Type)

COMPONENTS

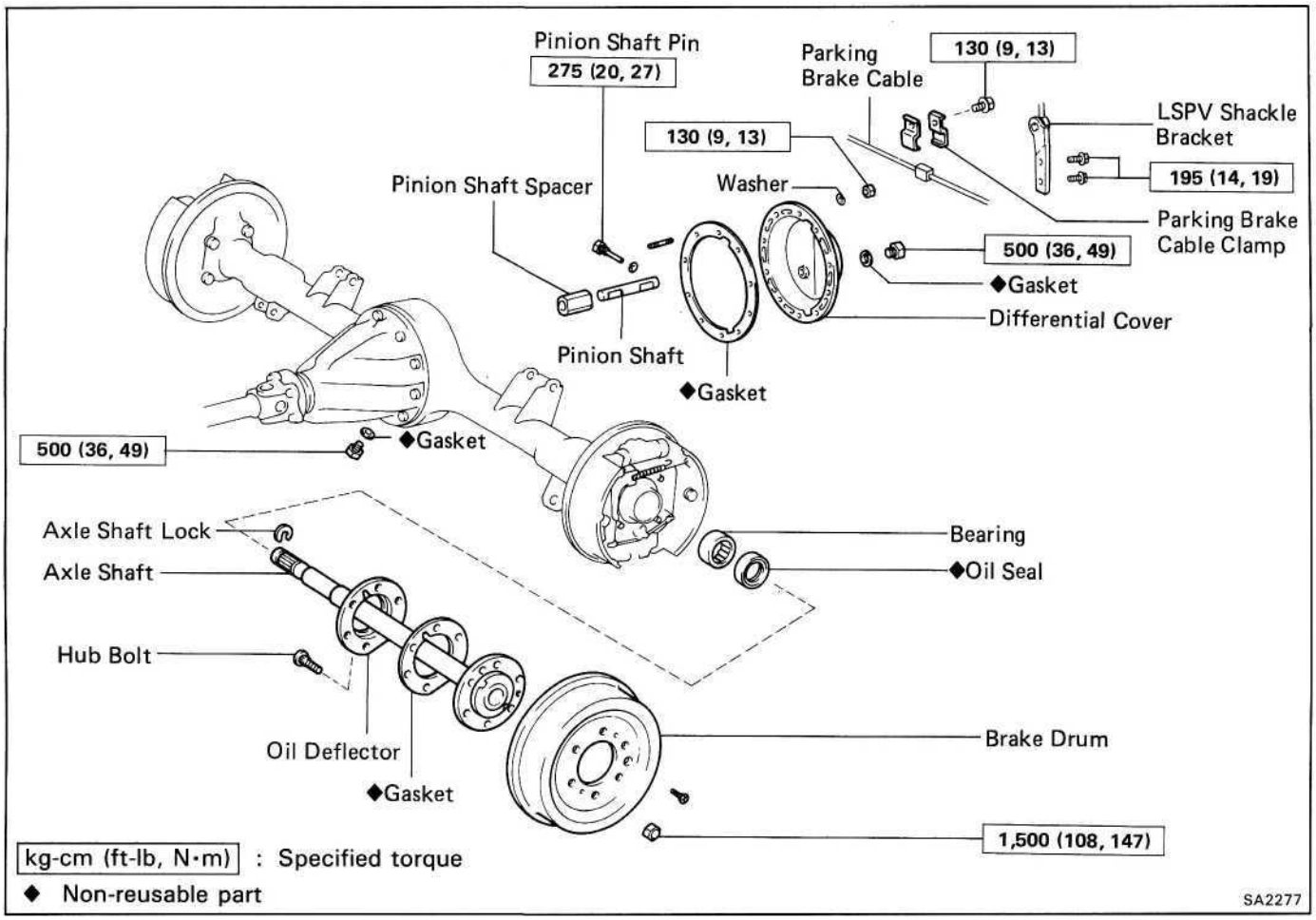

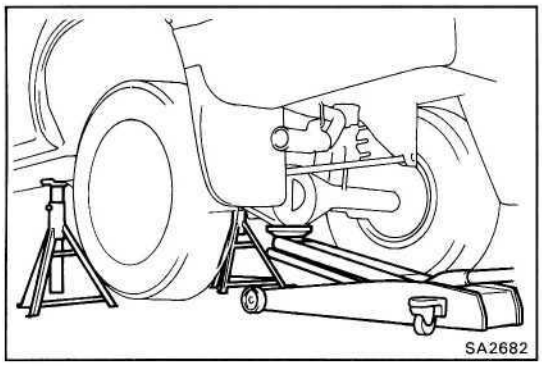

REMOVAL OF REAR AXLE SHAFT

1. **JACK UP AND SUPPORT VEHICLE**
2. **REMOVE REAR WHEEL AND BRAKE DRUM**

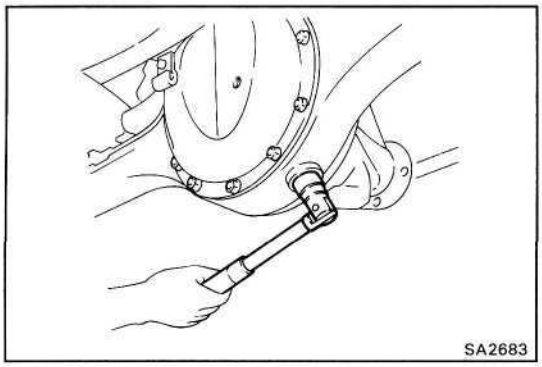

3. **REMOVE DRAIN PLUG AND DRAIN DIFFERENTIAL OIL**

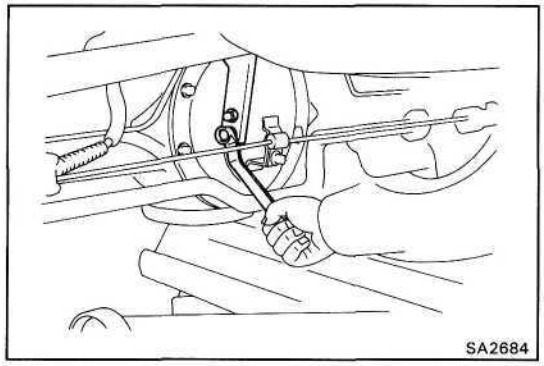

4. REMOVE LSPV SHACKLE BRACKET

Remove the two bolts and the shackle bracket from the differential cover.

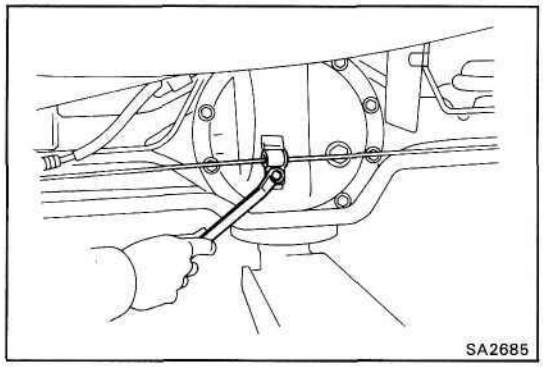

5. REMOVE PARKING BRAKE CABLE CLAMP

Remove the bolt and the clamp from the differential cover.

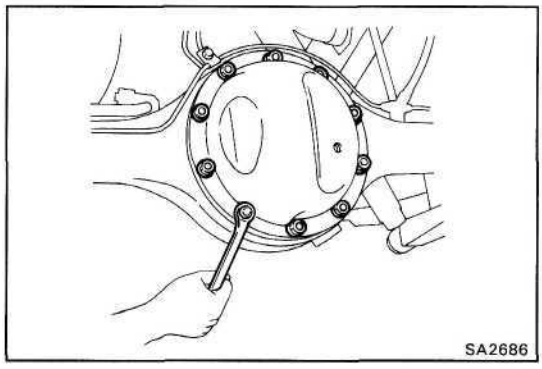

6. REMOVE DIFFERENTIAL COVER

(a) Remove the ten nuts and washers from the differential.

(b) Remove the differential cover with gasket from the differential.

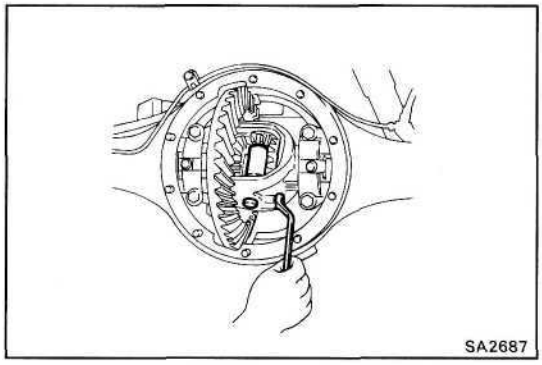

7. REMOVE PINION SHAFT AND SPACER

(a) Remove the pinion shaft pin from the differential.

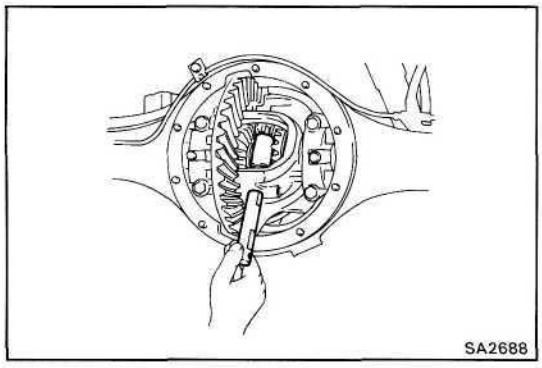

(b) Remove the pinion shaft and spacer.

HINT: When the pinion shaft is removed, the pinion gear and washer will come off also.

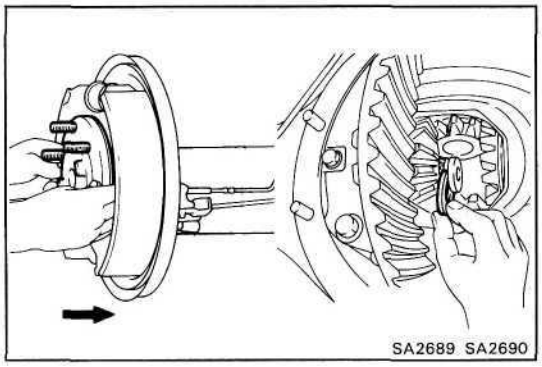

8. REMOVE AXLE SHAFT LOCK

Push the axle shaft to the differential side and remove the axle shaft lock.

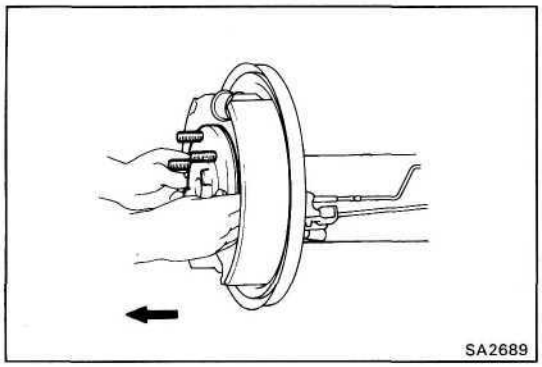

9. REMOVE AXLE SHAFT

NOTICE: When pulling out the axle shaft, be careful not to damage the oil seal.

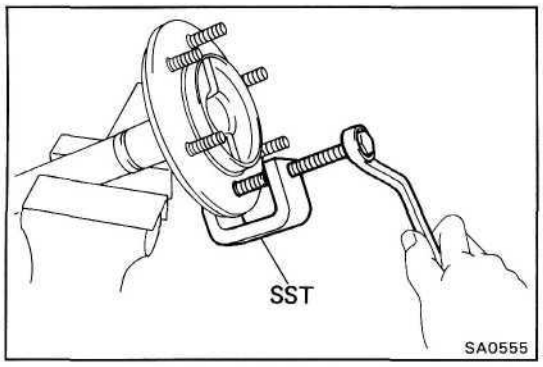

10. REMOVE OIL DEFLECTOR

Using SST, remove the hub bolts, oil deflector and gasket.

SST 09650-17011

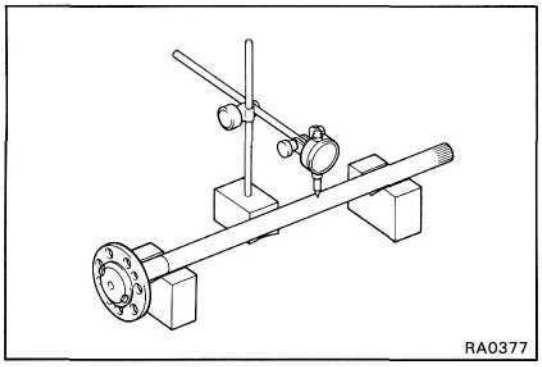

INSPECTION AND REPLACEMENT OF REAR AXLE SHAFT COMPONENTS

1. INSPECT REAR AXLE SHAFT

(a) Check for wear or damage.

(b) Check the runout of axle shaft.

Maximum runout: 0.8 mm (0.031 in.)

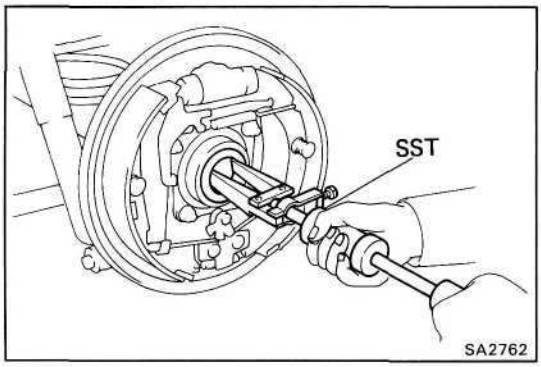

2. INSPECT OIL SEAL AND BEARING FOR WEAR OR DAMAGE

If the oil seal and bearing is damaged or worn, replace it.

3. REPLACE OIL SEAL AND BEARING

(a) Using SST, remove the oil seal.

SST 09308-00010

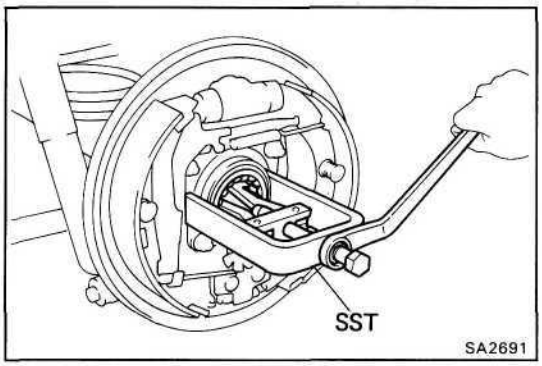

(b) Using SST, remove the bearing.

SST 09514-35011

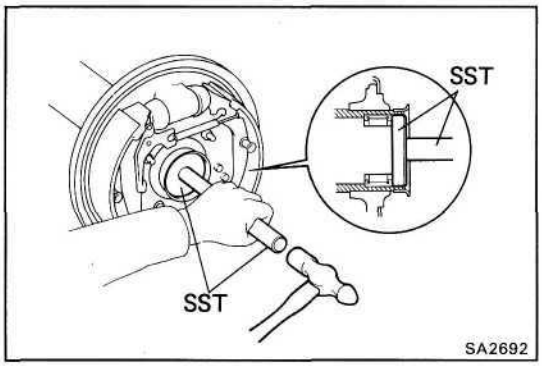

(c) Apply MP grease to the bearing.

(d) Using SST, drive in a new bearing.

SST 09608-20012 (09608-03020, 09608-03060)

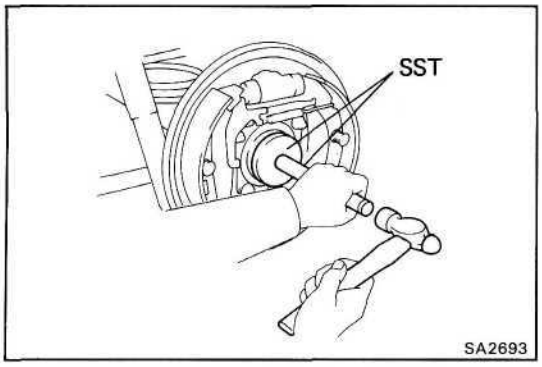

(e) Using SST, drive in a new oil seal.

SST 09608-20012 (09608-03020, 09608-03090)

(f) Apply MP grease to the oil seal lip.

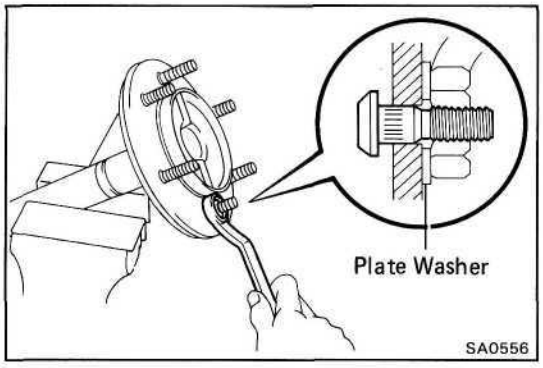

INSTALLATION OF REAR AXLE SHAFT

(See page SA-78)

1. INSTALL OIL DEFLECTOR

(a) Install a new gasket and the oil deflector.

(b) Install the plate washer on the hub bolt as shown in the illustration then tighten the nut to install the hub bolts.

(c) Remove the nut.

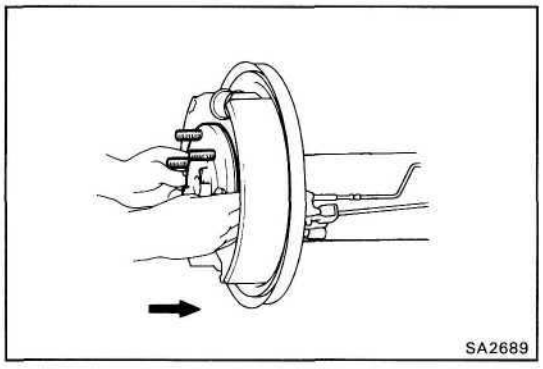

2. INSTALL REAR AXLE SHAFT IN AXLE HOUSING

Insert the axle shaft into the housing.

NOTICE: When inserting the axle shaft, be careful not to damage the oil seal.

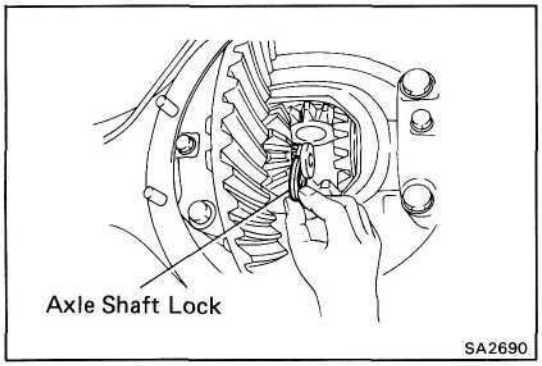

3. INSTALL AXLE SHAFT LOCK

(a) Install the axle shaft lock to axle shaft.

(b) Pull the axle shaft fully toward the outer side of the vehicle.

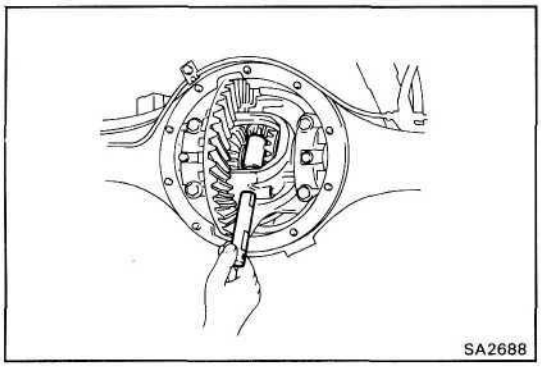

4. INSTALL PINION SHAFT AND PINION SHAFT SPACER

(a) Install the spacer and the pinion shaft to the differential.

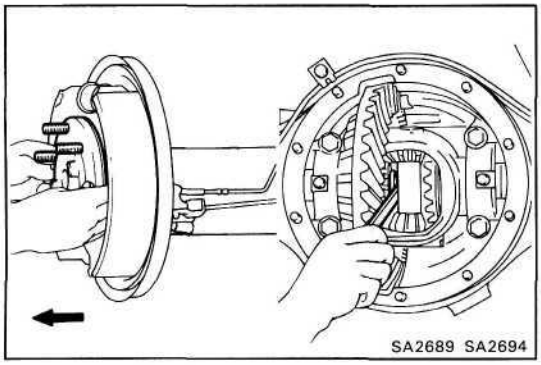

(b) Measure the thrust clearance between the axle shaft and spacer.

Maximum clearance: 0.5 mm (0.0020 in.)

If necessary, select the spacer.

Spacer thickness

Thickness mm (in.)
29.0 (1.142)
29.4 (1.157)
29.8 (1.173)
30.2 (1.189)
30.6 (1.205)

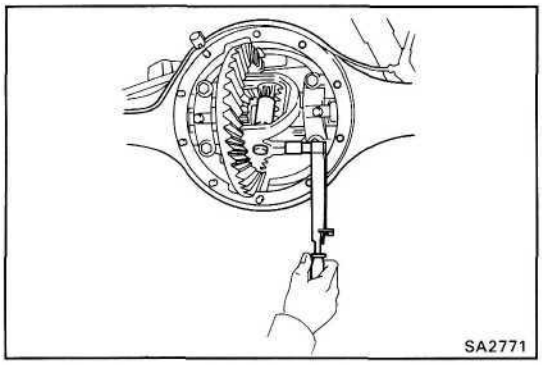

(c) Install the pinion shaft pin.

Torque: 275 kg-cm (20 ft-lb, 27 N-m)

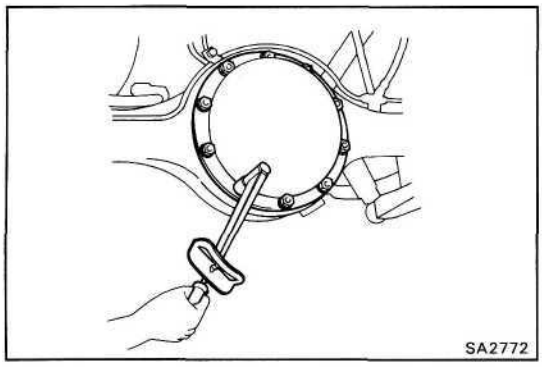

5. INSTALL DIFFERENTIAL COVER

(a) Install a new gasket and differential cover to the axle housing.

(b) Install the ten washers and nuts.

Torque: 130 kg-cm (9 ft-lb, 13 N-m)

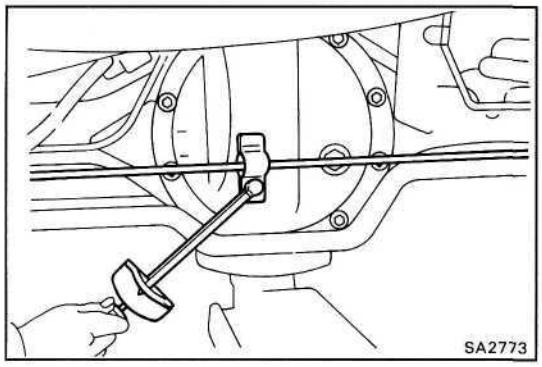

6. INSTALL PARKING BRAKE CABLE CLAMP

Install the clamp of the parking brake cable to the differential cover with the bolt.

Torque: 130 kg-cm (9 ft-lb, 13 N-m)

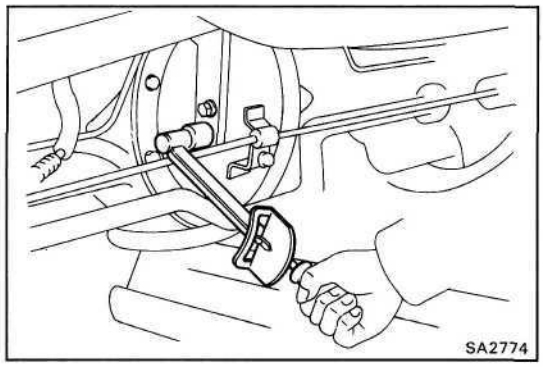

7. INSTALL LSPV SHACKLE BRACKET

Install the shackle bracket to differential cover with the two bolts.

Torque: 195 kg-cm (14 ft-lb, 19 N-m)

8. INSTALL BRAKE DRUM AND WHEEL

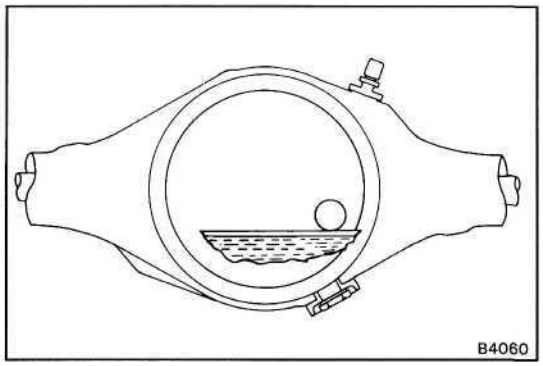

9. FILL DIFFERENTIAL WITH GEAR OIL

Fill with hypoid gear oil.

Oil type:

w/o LSD API GL-5
w/ LSD API GL-5 for LSD

Viscosity:

Above -18°C (0°F) SAE 90
Below -18°C (0°F) SAE 80 W or 80 W-90

Capacity: 3.25 liters (3.4 US qts, 2.9 Imp.qts)

10. LOWER VEHICLE

REPLACEMENT OF HUB BOLT

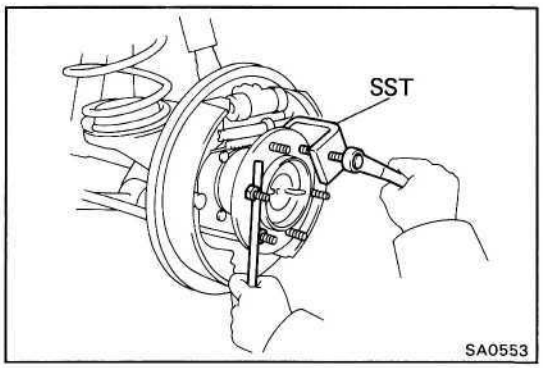

1. JACK UP AND SUPPORT VEHICLE

2. REMOVE WHEEL AND BRAKE DRUM

3. REMOVE HUB BOLT

Using SST, remove the hub bolt.

SST 09650-1 7011

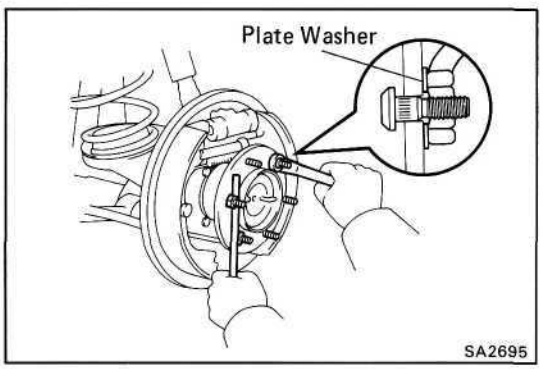

4. INSTALL HUB BOLT

Hold the axle shaft, using plate washers and nuts, install new hub bolts.

5. INSTALL BRAKE DRUM AND WHEEL

6. LOWER VEHICLE

REAR AXLE SHAFT AND AXLE HUB (Full-Floating Type)

COMPONENTS

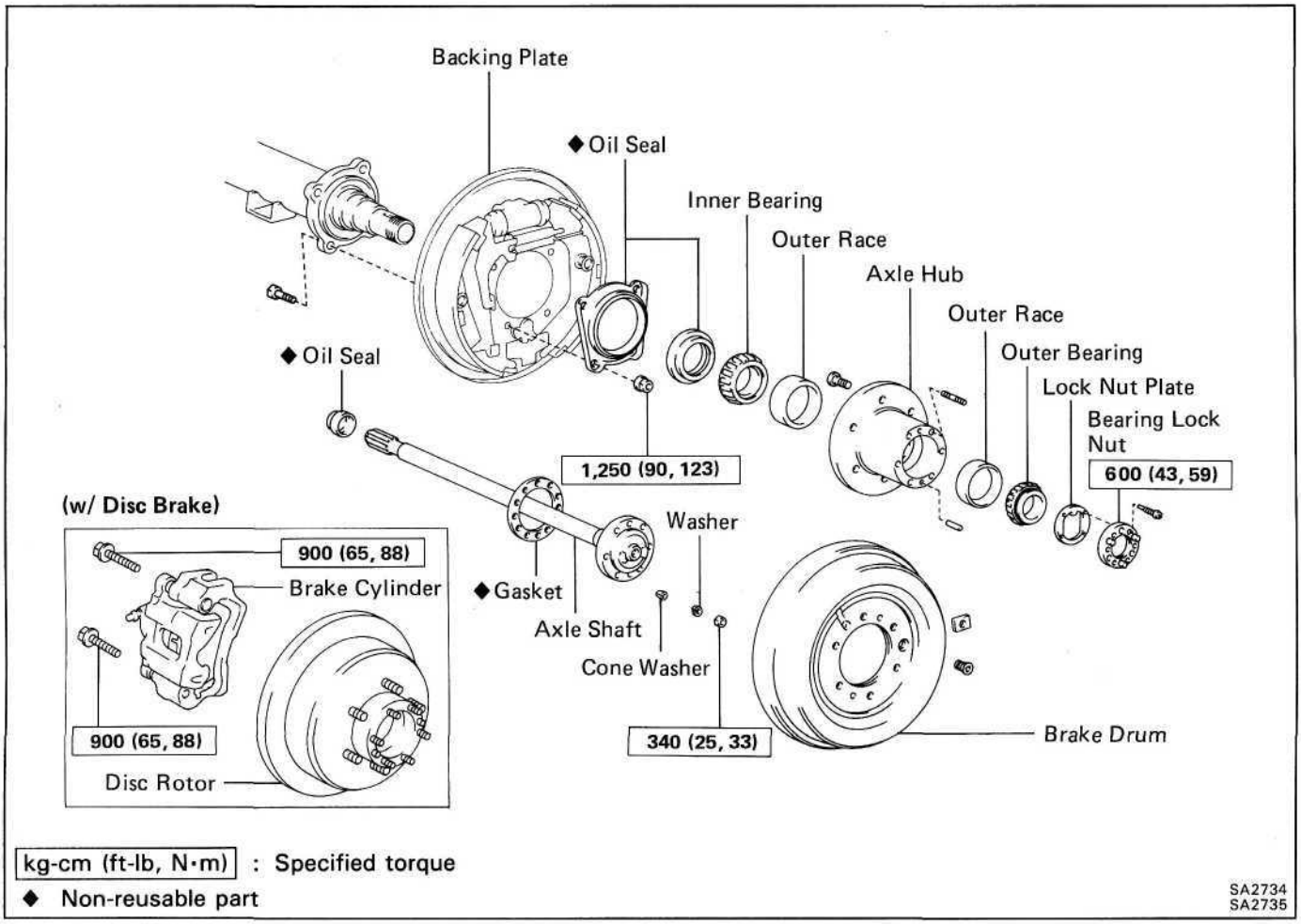

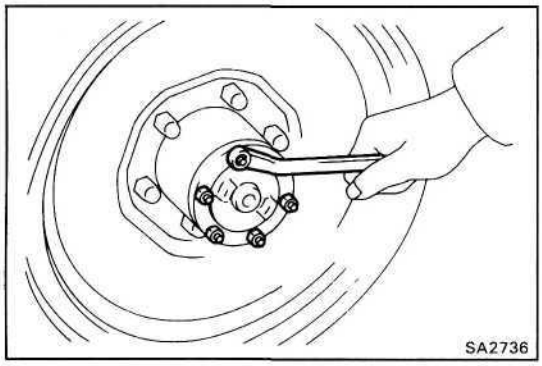

REMOVAL OF REAR AXLE SHAFT

1. REMOVE AXLE SHAFT SET NUT

Remove the six set nuts and washers.

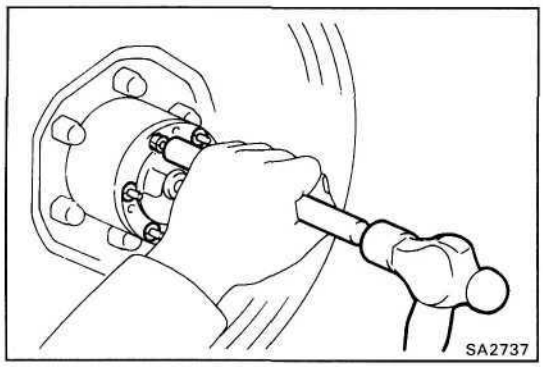

2. REMOVE CONE WASHER

Using a hammer and brass bar, drive on the bolt and remove the six cone washers.

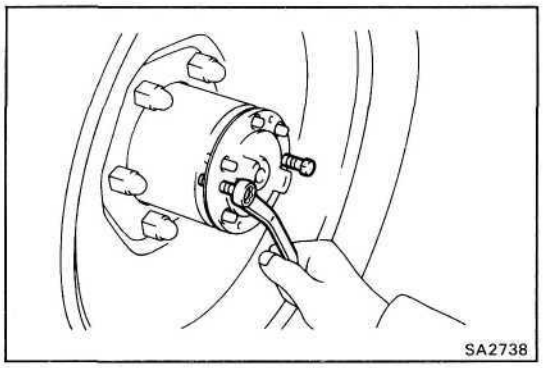

3. REMOVE REAR AXLE SHAFT

(a) Install the two service bolts to the service hole and tighten them.

(b) If the axle shaft separates, remove the two service bolts.

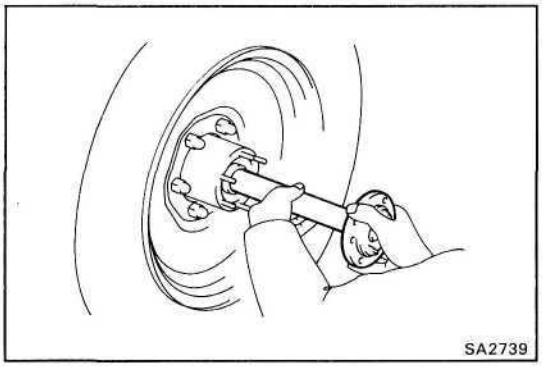

(c) Remove the axle shaft with the gasket.

NOTICE: When pulling out the axle shaft, be careful not to damage the oil seal.

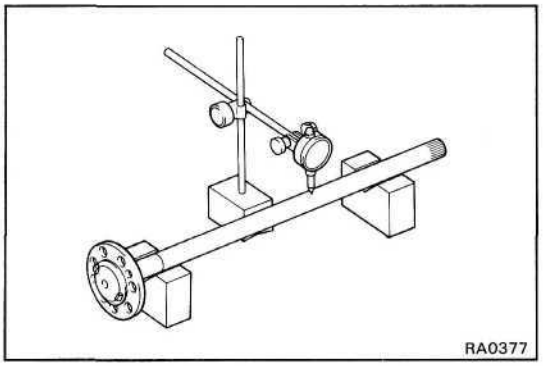

INSPECTION OF REAR AXLE SHAFT COMPONENTS

1. INSPECT REAR AXLE SHAFT

Inspect the rear axle shaft for wear, damage or runout.

Maximum runout: 0.8 mm (0.031 in.)

If the rear axle shaft is damaged or worn, or if runout is greater than maximum, replace the rear axle shaft.

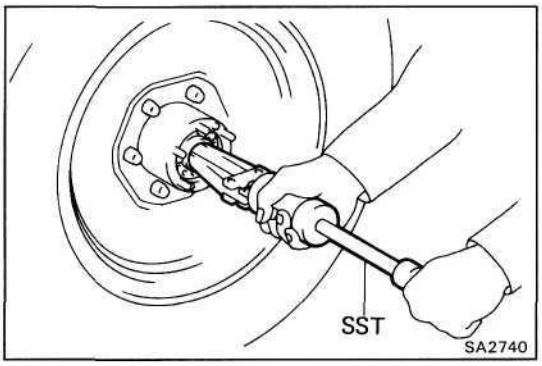

2. INSPECT OIL SEAL FOR WEAR OR DAMAGE

If the oil seal is damaged or worn, replace it.

3. IF NECESSARY, REPLACE OIL SEAL

(a) Using SST, remove the oil seal.

SST 09308-00010

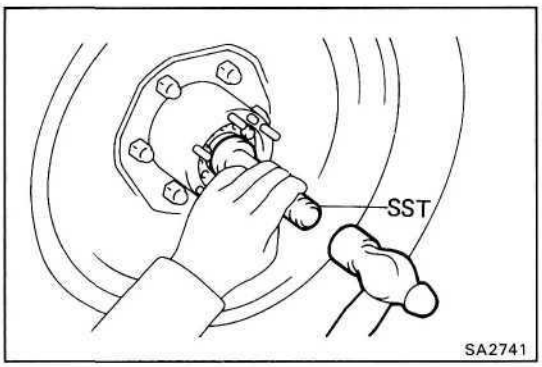

(b) Using SST, drive in a new oil seal.

SST 09517-36010

(c) Apply MP grease to the oil seal lip.

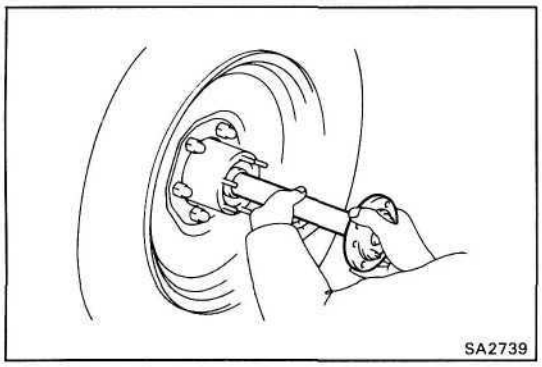

INSTALLATION OF REAR AXLE SHAFT

(See page SA-84)

1. APPLY MP GREASE TO OIL SEAL LIP

2. INSTALL NEW GASKET AND INSERT AXLE SHAFT

NOTICE: When inserting the axle shaft, be careful not to damage the oil seal.

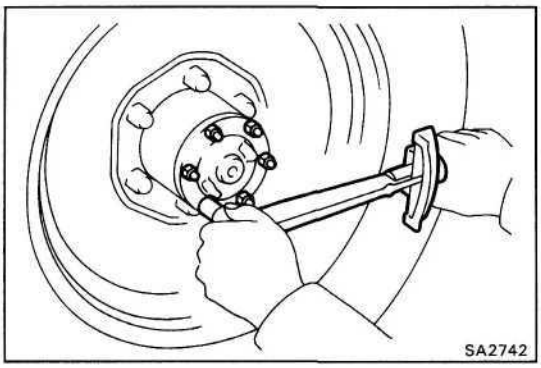

3. INSTALL CONE WASHER AND SET NUT

Install the cone washers, spring washers and six nuts. Torque the nuts.

Torque: 340 kg-cm (25 ft-lb, 33 N-m)

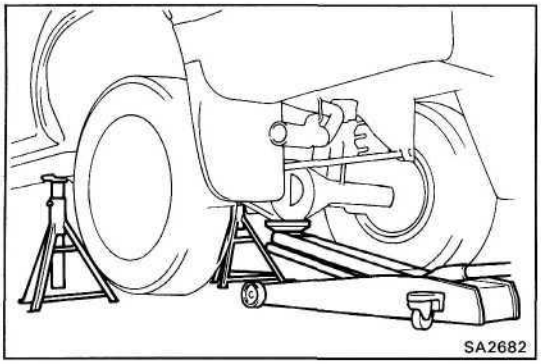

REMOVAL OF REAR AXLE HUB

(See page SA-84)

1. JACK UP VEHICLE AND REMOVE WHEEL

2. REMOVE REAR AXLE SHAFT
(See page SA-84)

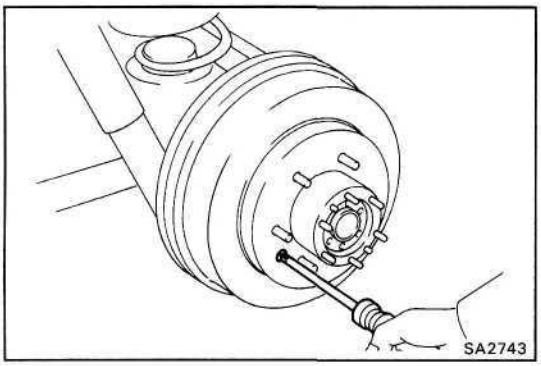

3. (w/ DRUM BRAKE TYPE)
REMOVE BRAKE DRUM

(a) Remove the screw from the brake drum.

(b) Remove the brake drum from the axle hub.

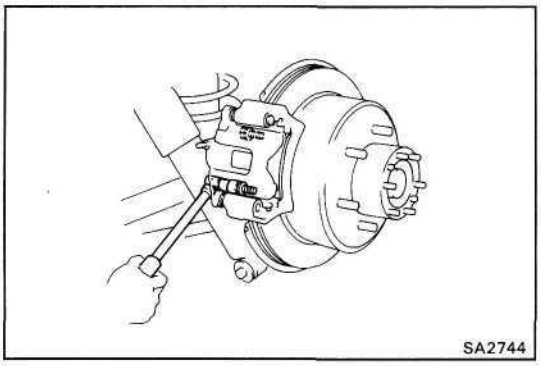

4. (w/ DISC BRAKE TYPE)
REMOVE DISC BRAKE ASSEMBLY

Remove the two bolts and the cylinder with torque plate from the rear axle carrier.

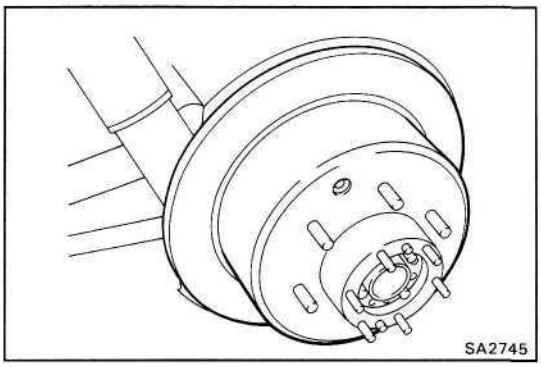

5. (w/ DISC BRAKE TYPE) REMOVE ROTOR DISC

Remove the rotor disc from the axle hub.

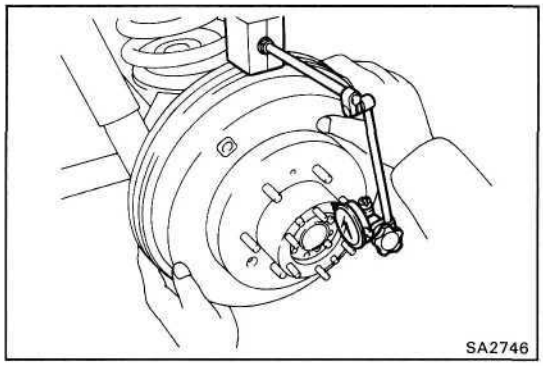

6. REMOVE BEARING LOCK NUT

(a) Check the movement of the drum or the hub.

(b) Check the hub axial play.

Hub axial play: Less than 0.1 mm (0.004 in.)

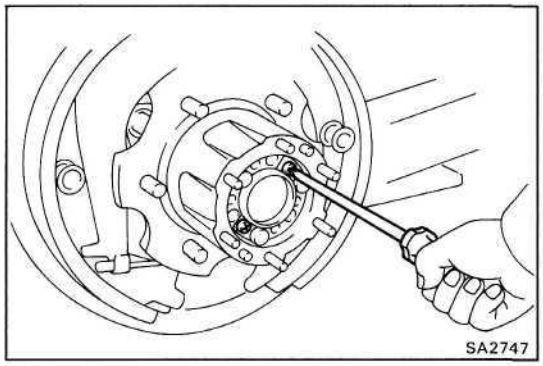

(c) Remove the two lock nut screws.

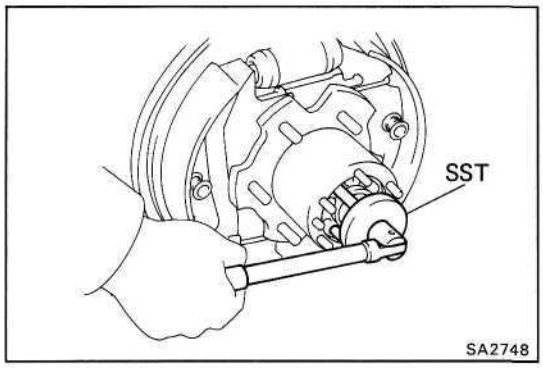

(d) Using SST, remove the lock nut.

SST 09509-25011

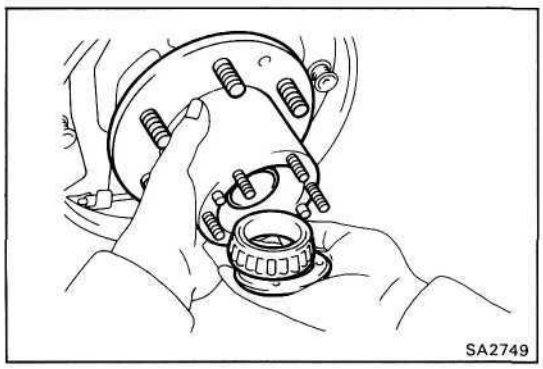

7. REMOVE REAR AXLE HUB

Remove the axle hub with the lock nut plate and outer bearing.

8. REMOVE BACKING PLATE AND OIL SEAL

Remove the four nuts and bolts and remove the oil seal and backing plate.

REPLACEMENT OF AXLE HUB COMPONENTS

1. INSPECT AXLE HOUSING

Using a magnetic flaw detector or flaw detecting penetrant, check for damage or cracks.

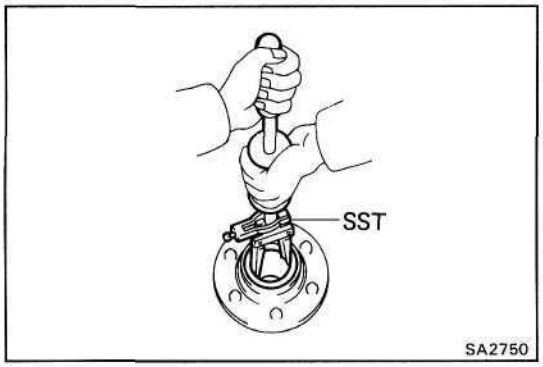

2. REMOVE OIL SEAL AND INNER BEARING

(a) Using SST, remove the oil seal.

SST 09308-00010

(b) Remove the inner bearing from the axle hub.

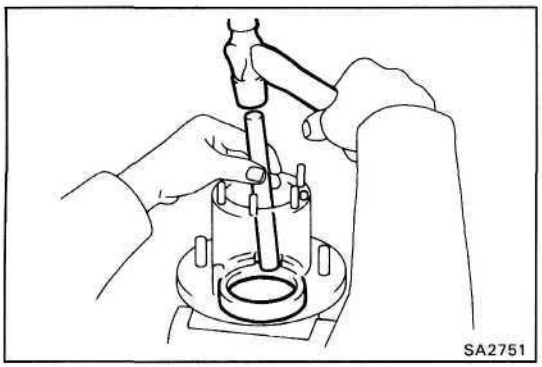

3. REMOVE BEARING OUTER RACE

Using a hammer and brass bar, drive out the bearing outer race from the axle hub.

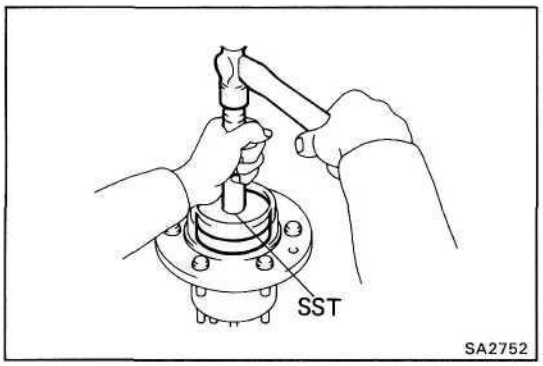

4. INSTALL BEARING OUTER RACE

Using SST, drive in the bearing outer race to the axle hub.

SST 09608-35014
(09608-06020, 09608-06200, 09608-06210)

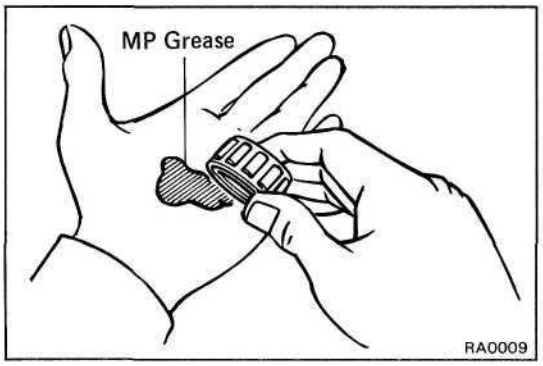

5. COAT BEARING WITH MP GREASE

(a) Place MP grease in the palm of your hand.

(b) Pack grease into the bearing, continuing until the grease oozes out from the other side.

(c) Do the same around the bearing circumference.

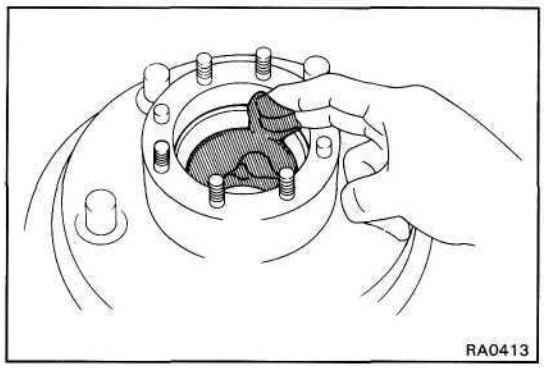

6. COAT INSIDE OF HUB WITH MP GREASE

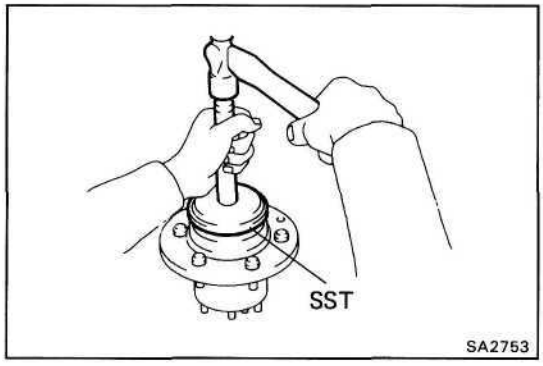

7. INSTALL INNER BEARING AND OIL SEAL

(a) Install the inner bearing to the axle hub.

(b) Using SST, drive in the oil seal to the axle hub.

SST 09608-35014 (09608-06020, 09608-06150)

(c) Coat MP grease to the oil seal lip.

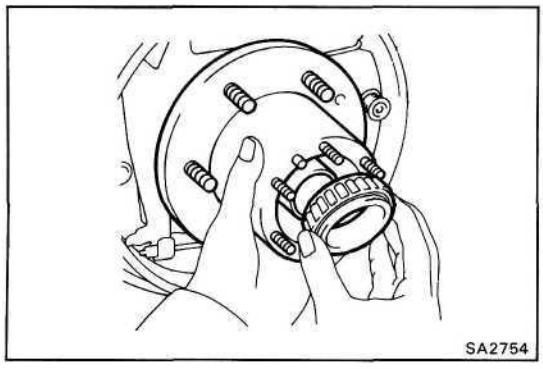

INSTALLATION OF REAR AXLE HUB

(See page SA-84)

1. INSTALL AXLE HUB

(a) Install the backing plate and oil seal to the axle housing with the four bolts and nuts.

(b) Install the axle hub to the axle housing.

NOTICE: Be careful not to damage the oil seal.

(c) Install the outer bearing.

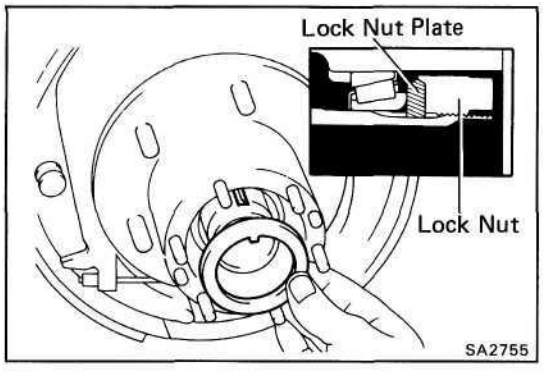

2. INSTALL LOCK NUT PLATE AND BEARING LOCK NUT

(a) After fully pushing in the outer bearing, position the protrusion of the lock nut plate into the axle housing groove.

(b) Temporarily install the bearing lock nut.

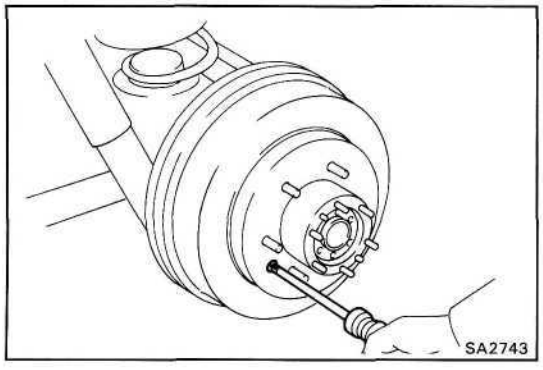

3. (w/ DRUM BRAKE TYPE) INSTALL BRAKE DRUM

(a) Install the brake drum to the axle hub.

(b) Install the screw to the brake drum.

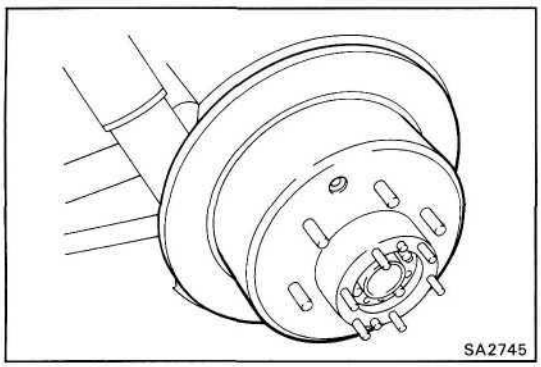

4. (w/ DISC BRAKE TYPE)
INSTALL ROTOR DISC

Install the rotor disc to the axle hub.

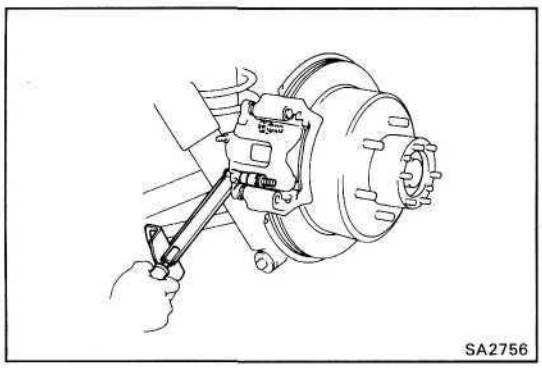

5. (w/ DISC BRAKE TYPE)
INSTALL DISC BRAKE ASSEMBLY

Install the brake cylinder with torque plate to the rear carrier with the two bolts.

Torque: 900 kg-cm (65 ft-lb, 88 N-m)

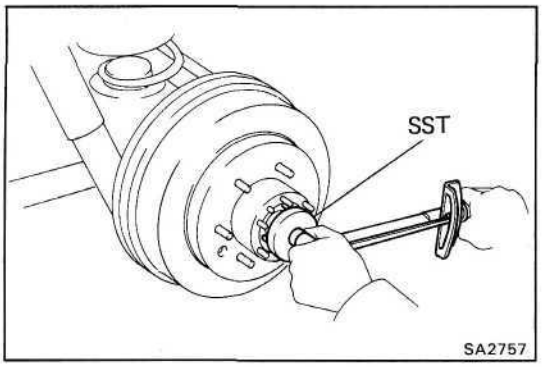

6. ADJUST PRELOAD

(a) Using SST, torque the bearing lock nut.

SST 09509-25011

Torque: 600 kg-cm (43 ft-lb, 59 **N-m)**

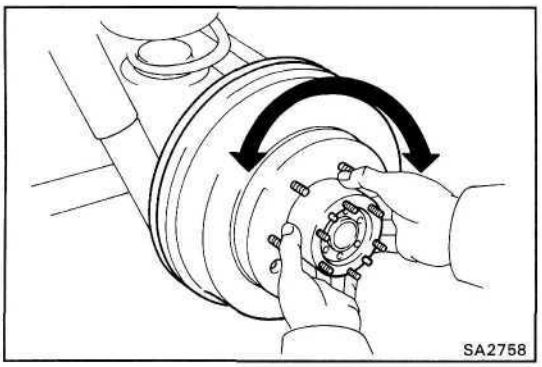

(b) Snug down the bearing by turning the hub several times.

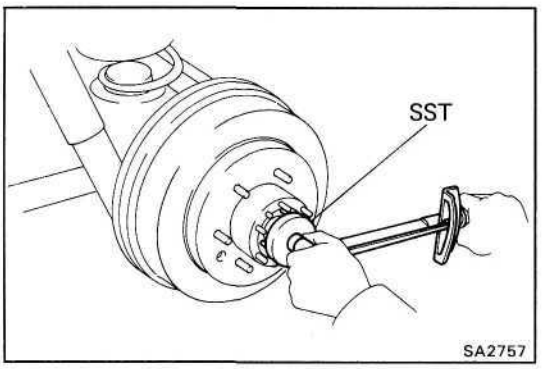

(c) Using SST, retighten the bearing lock nut.

SST 09509-25011

Torque: 600 kg-cm (43 ft-lb, 59 N-m)

(d) Using SST, loosen the bearing lock nut until you can rotate it by hand.

SST 09509-25011

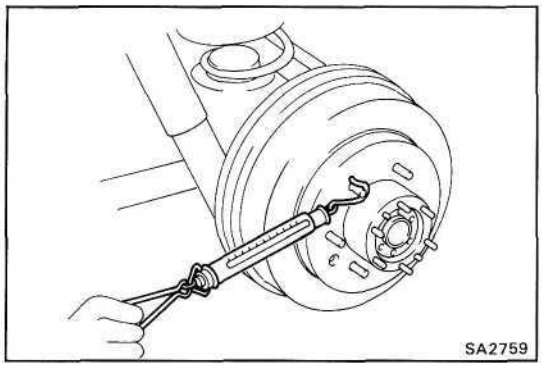

(e) Using a spring tension gauge, measure the frictional force of the oil seal.

Rear wheel bearing preload (at starting):
0.6 - 1.4 kg (1.3 - 7.2 lb, 5.8 - 14 N)

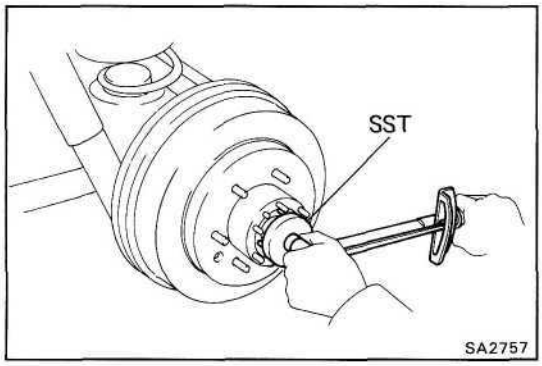

(f) Using SST, retighten the bearing lock nut.

SST 09509-2501 1

Torque: 600 kg-cm (43 ft-lb, 59 N·m)

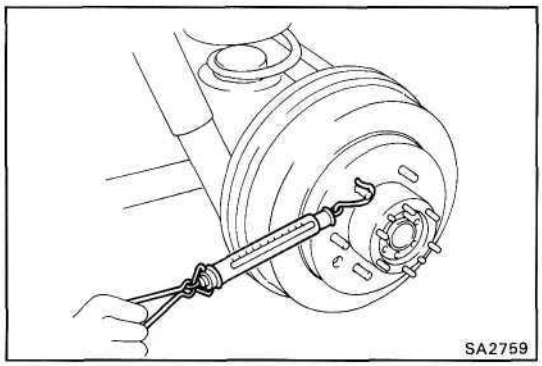

(g) Using a spring tension gauge, measure the preload at the hub bolt.

Rear wheel bearing preload (at starting):
0.6 - 1.4 kg (1.3 - 7.2 1b, 5.8 - 14 N)

If preload is not with in specification, the procedure above must be repeated.

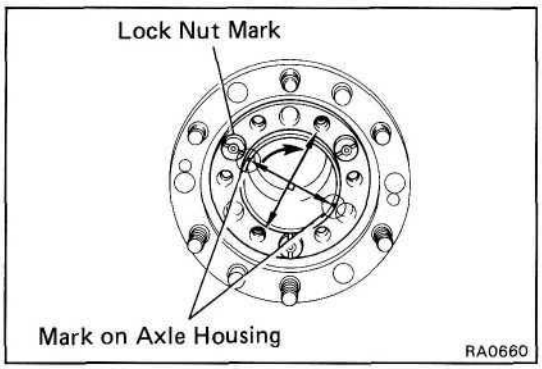

(h) Align the lock nut mark with one of the marks on the axle housing, and place lock screws in the holes at right angles to the lock nut.

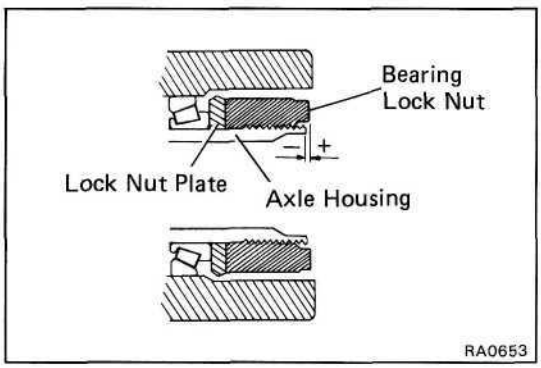

(i) Measure the distance between the top surface of axle housing and the lock nut.

Standard distance: —0.2 — 0.9 mm
(-0.008 - 0.035 in.)

If not within specification, reinstall the axle hub.

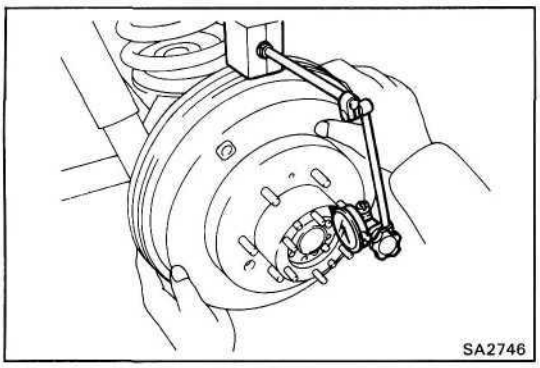

(j) Check the movement of the drum.

(k) Check the hub axial play.

Hub axial play: Less than 0.1 mm (0.004 in.)

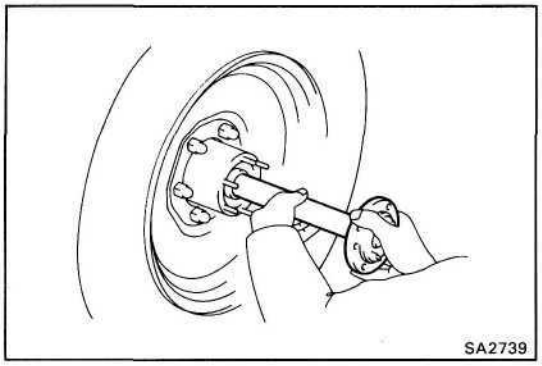

7. INSTALL REAR AXLE SHAFT
(See page SA-86)

8. INSTALL WHEEL AND LOWER VEHICLE

REAR DIFFERENTIAL

On-Vehicle Replacement of Front Oil Seal

COMPONENTS

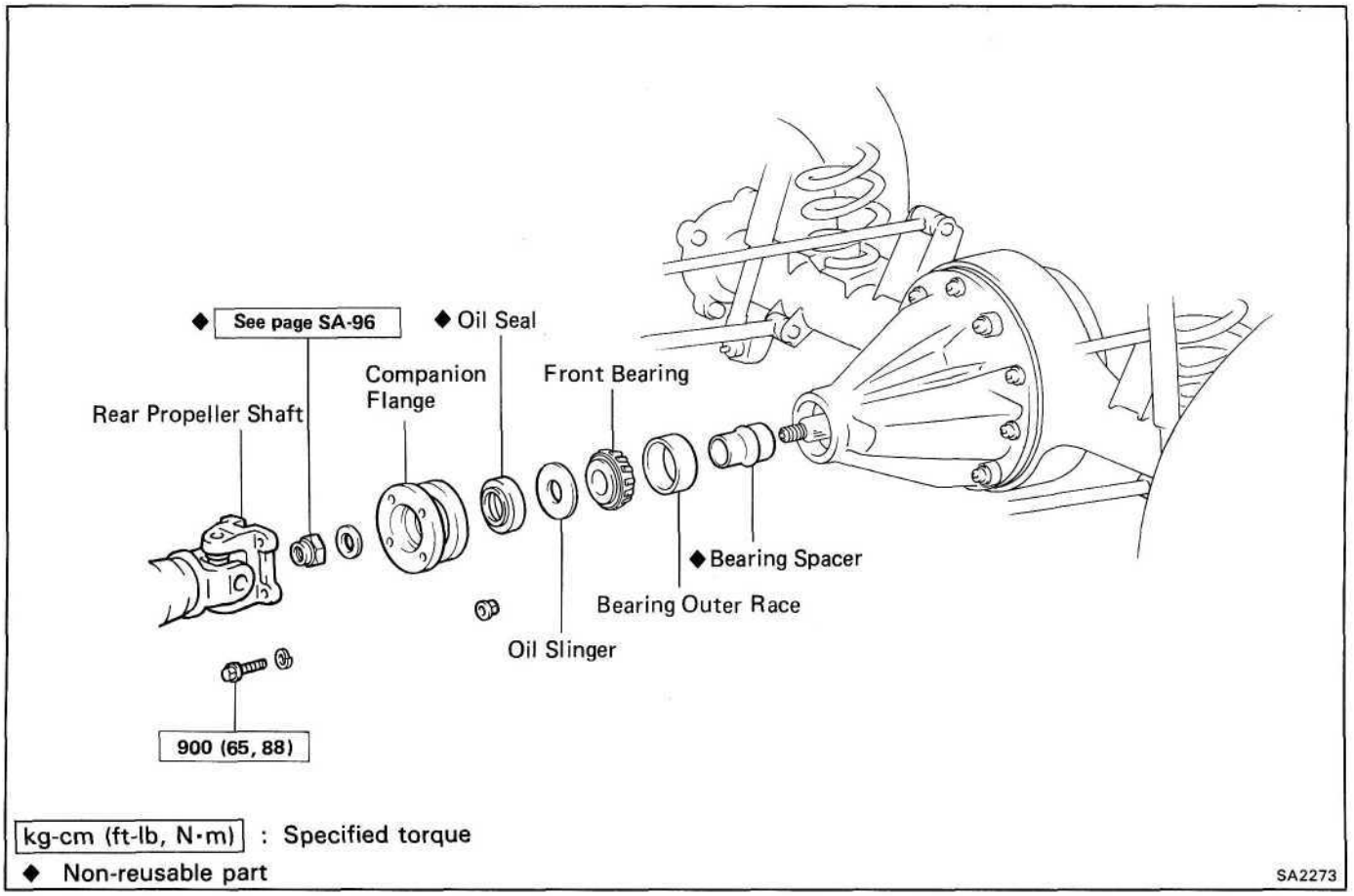

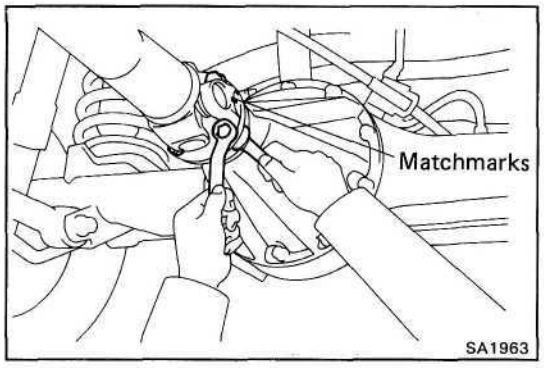

1. DISCONNECT REAR PROPELLER SHAFT

(a) Place matchmarks on the flanges.

(b) Remove the four bolts and nuts.

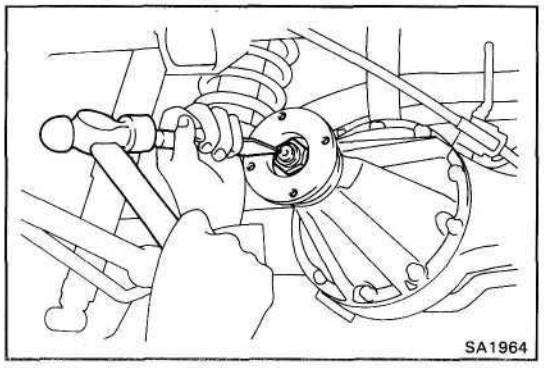

2. REMOVE COMPANION FLANGE

(a) Using a chisel and hammer, loosen the staked part of nut.

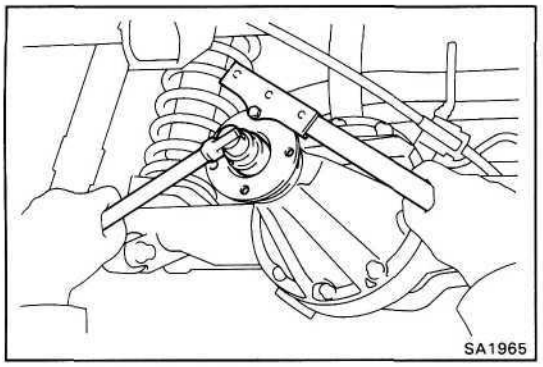

(b) Using SST to hold the flange, remove the nut and plate washer.

SST 09330-00021

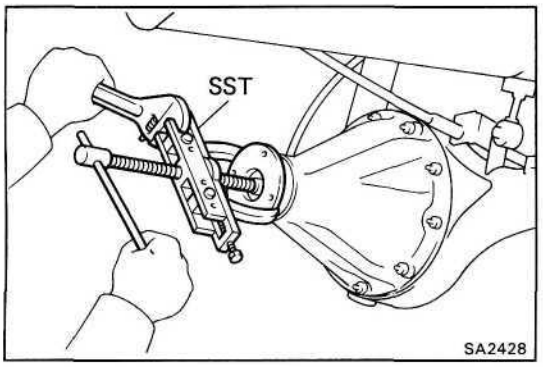

(c) Using SST, remove the companion flange.

SST 09950-20017

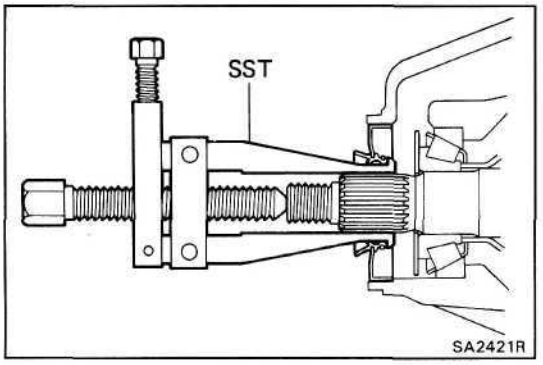

3. REMOVE OIL SEAL AND OIL SLINGER

(a) Using SST, remove the oil seal.

SST 09308-10010

(b) Remove the oil slinger.

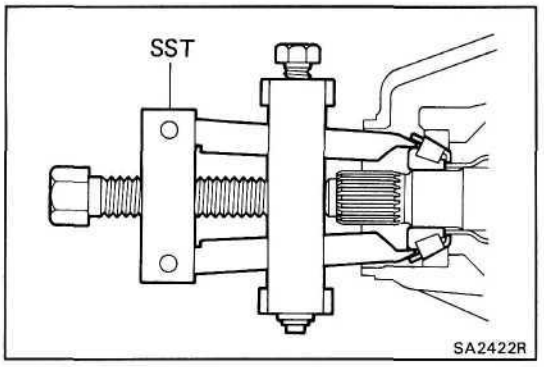

4. REMOVE FRONT BEARING

Using SST, remove the front bearing.

SST 09556-22010

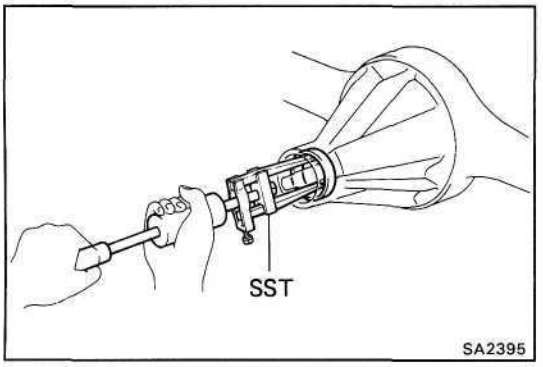

5. REMOVE BEARING OUTER RACE

Using SST, remove the bearing outer race.

SST 09308-00010

NOTICE: Do not scratch the taper surface of the outer race.

6. REMOVE BEARING SPACER

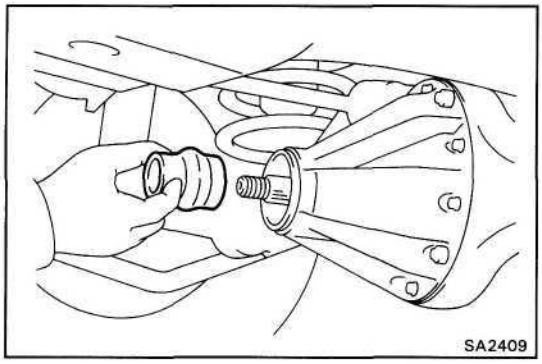

7. INSTALL NEW BEARING SPACER

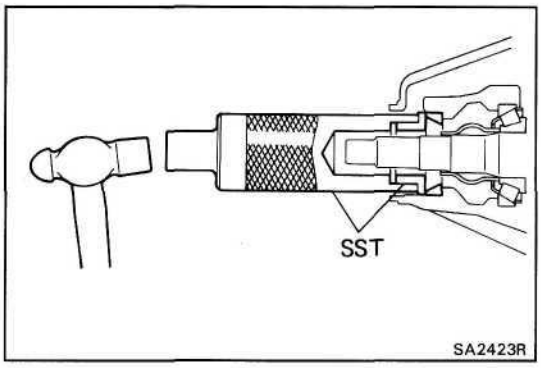

8. INSTALL BEARING OUTER RACE

Using SST, drive in bearing outer race.

SST 09316-60010 (09316-00010, 09316-00020)

9. INSTALL FRONT BEARING

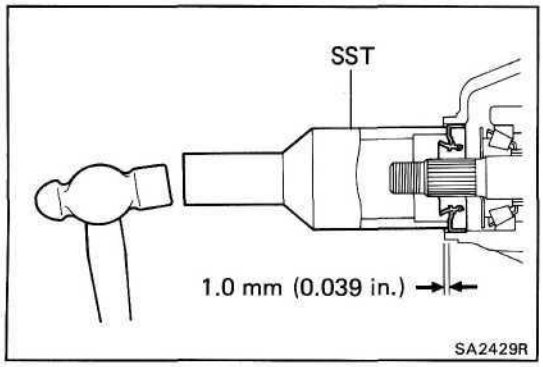

10. INSTALL OIL SLINGER AND NEW OIL SEAL

(a) Install the oil slinger facing as shown.

(b) Using SST, drive in a new oil seal as shown.

SST 09214-76011

Oil seal drive in depth: 1.0 mm (0.039 in.)

(c) Coat the lip of the oil seal with MP grease.

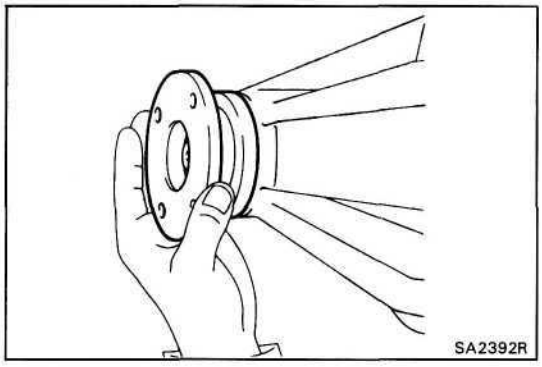

11. INSTALL COMPANION FLANGE

(a) Install the companion flange and plate washer.

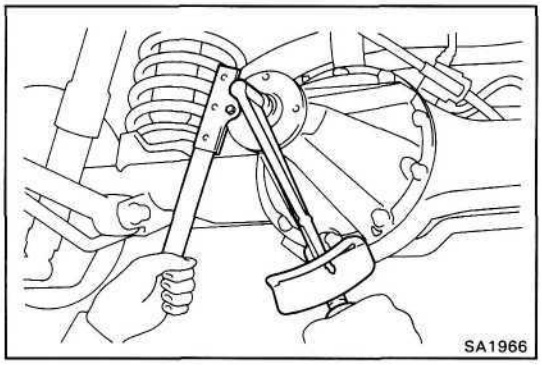

(b) Apply a light coat of gear oil on the threads of a new companion flange nuts.

(c) Using SST to hold the flange, torque the nut.

SST 09330-00021

Torque: 2,500 kg-cm (181 ft-lb, 245 N-m)

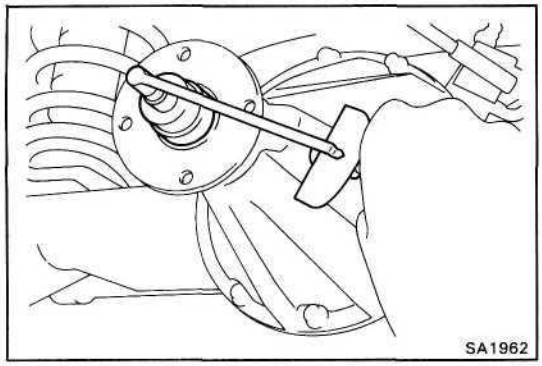

12. CHECK DRIVE PINION PRELOAD

Using a torque meter, measure the preload of the backlash between the drive pinion and ring gear.

Preload (at starting):
New bearing
13 — 20 kg-cm
(11.3 - 17.4in.-lb, 1.3 - 2.0 N-m)
Reused bearing
7 - 1 0 kg-cm
(6.1 - 8.7 in.-lb, 0.7 - 1.0 N-m)

- If preload is greater than specification, replace the bearing spacer.
- If preload is less than specification, retighten the nut 130 kg-cm (9 ft-lb, 13 N-m) at a time until the specified preload is reached.

If the maximum torque is exceeded while retightening the nut, replace the bearing spacer and repeat the preload procedure. Do not back off the pinion nut to reduce the preload.

Maximum torque: 4,500 kg-cm (325 ft-lb, 441 N-m)

If everything is normal, coat the threads with gear oil, then repeat the above operation.

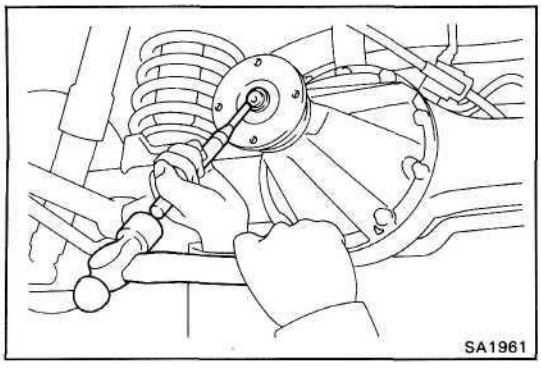

13. STAKE DRIVE PINION NUT

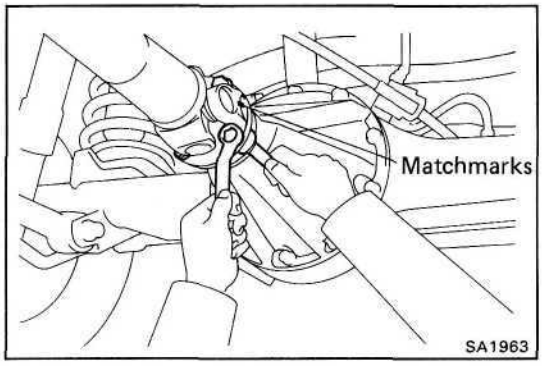

14. CONNECT REAR PROPELLER SHAFT

(a) Align the matchmarks on the flanges and connect the flanges with four bolts, spring washers and nuts.

(b) Torque the bolts and nuts.

Torque: 900 kg-cm (65 ft-lb, 88 N-m)

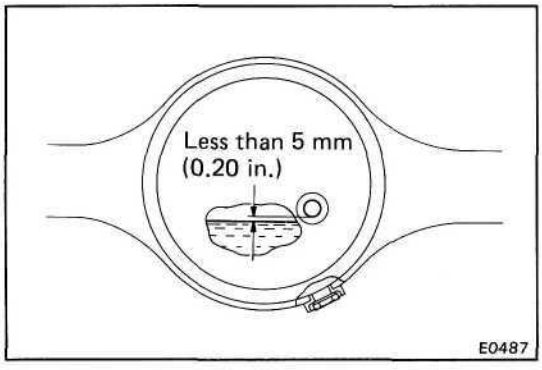

15. CHECK DIFFERENTIAL OIL LEVEL

Fill with hypoid gear oil if necessary.

Oil type:
w/o LSD API GL-5
w/ LSD API GL-5 for LSD
Recommended oil viscosity:
Above -18°C (0°F) SAE 90
Below -18°C (0°F) SAE 80W or 80W-90

Capacity: 3.25 liters (3.4 US qts, 2.9 Imp.qts)

Removal and Installation of Rear Differential

COMPONENTS

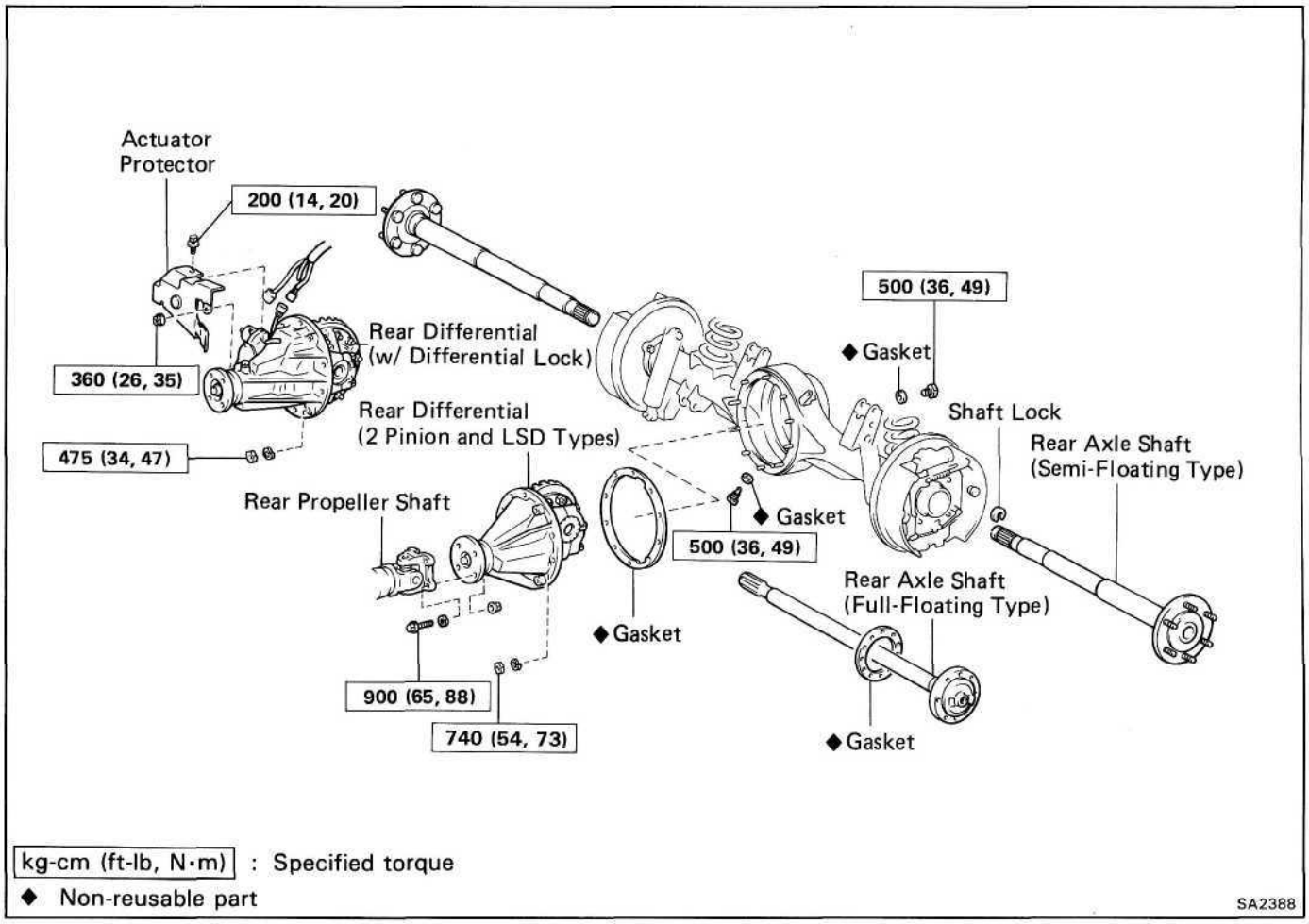

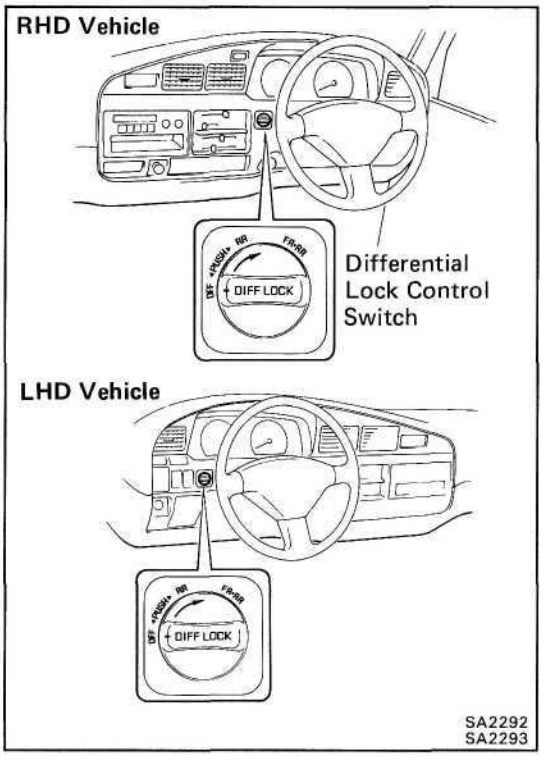

REMOVAL OF REAR DIFFERENTIAL

1. **(w/ DIFFERENTIAL LOCK) SHIFTING REAR DIFFERENTIAL LOCK**
   (a) Turn the ignition switch to ON position.
   (b) Keep the 4WD condition (Part-Time Models) or center differential lock condition (Full-Time Models).
   (c) Turn the differential lock control switch to RR or FR-RR position and lock the rear differential.

   HINT: Rotating the tires, check they are in the differential lock condition.

   (d) Disconnect the cable from the negative terminal of battery.

2. REMOVE DRAIN PLUG AND DRAIN DIFFERENTIAL OIL

3. REMOVE REAR AXLE SHAFTS
(Semi-Floating Type: See page SA-78)
(Full-Floating Type: See page SA-84)

4. DISCONNECT REAR PROPELLER SHAFT
(See step 1 on page SA-93)

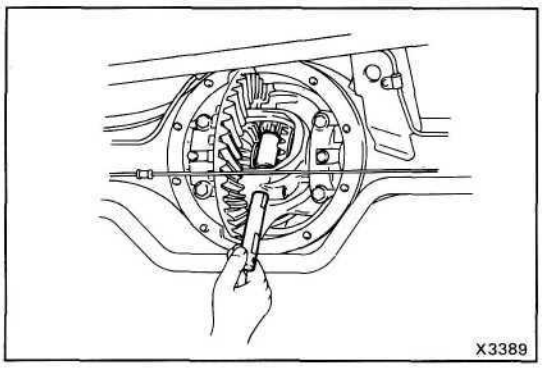

5. (2 PINION TYPE)
INSTALL PINION SHAFT AND PINION SPACER

(a) Install the spacer and pinion shaft to the differential.

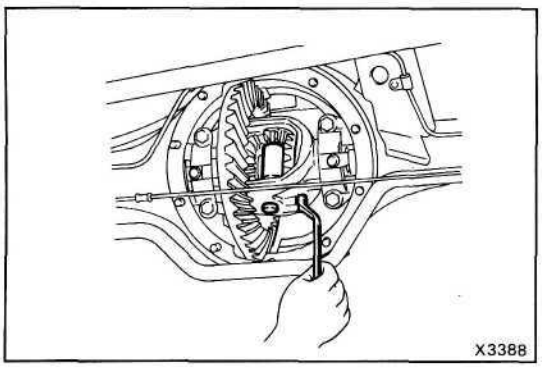

(b) Install the pinion shaft pin.

Torque: 275kg-cm (20 ft-lb, 27 N·m)

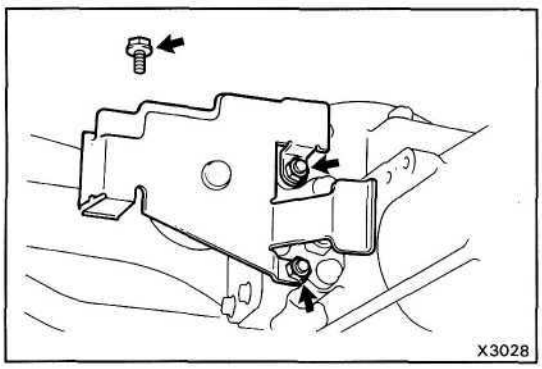

6. (w/ DIFFERENTIAL LOCK)
REMOVE ACTUATOR PROTECTOR

Remove the two nuts and bolt, remove the protector.

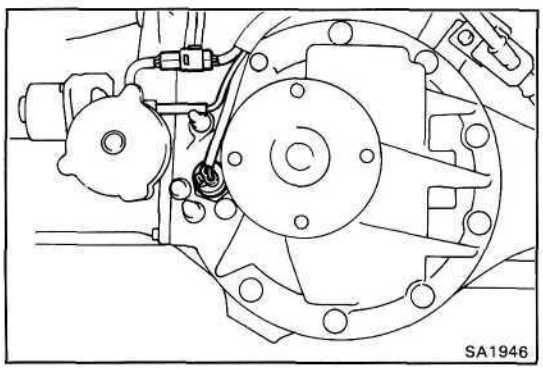

7. (w/ DIFFERENTIAL LOCK)
DISCONNECT CONNECATORS AND HOSE

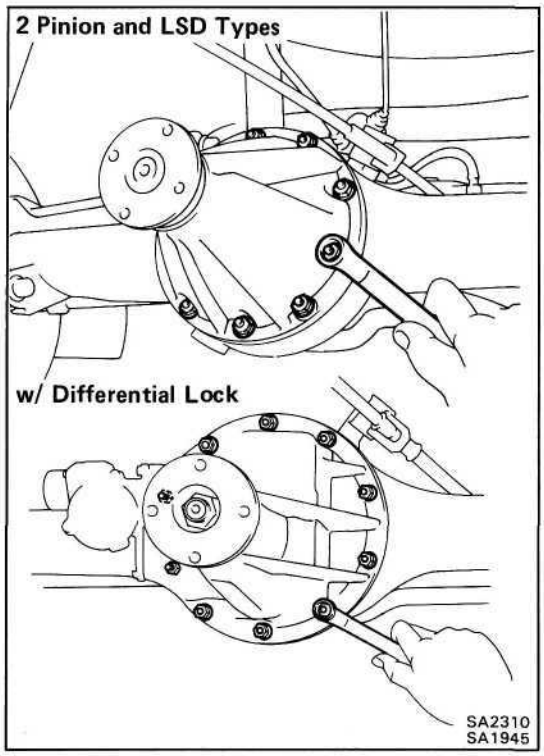

8. REMOVE DIFFERENTIAL CARRIER ASSEMBLY

NOTICE: Do not scratch the installation surface.

INSTALLATION OF REAR DIFFERENTIAL

(See page SA-97)

1. (w/ DIFFERENTIAL LOCK)
CHECK DIFFERENTIAL LOCK OPERATION

(a) Connect the connector of the actuator to the connector of the vehicle side, and check that the sleeve is on work with switching over the differential lock control switch.

(b) After checking lock the rear differential.

2. INSTALL A NEW GASKET

3. INSTALL DIFFERENTIAL CARRIER ASSEMBLY

Install the differential carrier assembly in the axle and install the ten nuts. Torque the nuts.

Torque: 740 kg-cm (54 ft-lb, 73 N-m)

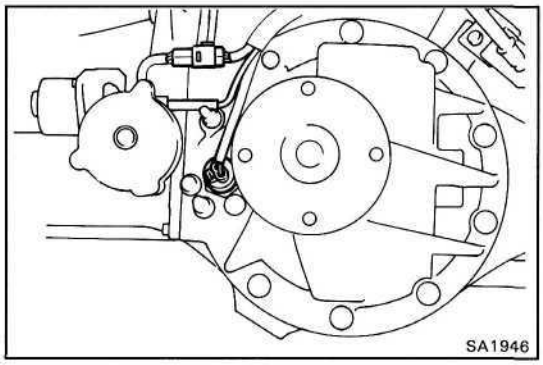

4. (w/ DIFFERENTIAL LOCK)
CONNECT CONNECTORS AND TUBE

HINT:
- When connecting the tube of the harness side to the hose of the actuator side, the depth of the insertion is 15 mm (0.59 in.).
- Take care that water or the equivalent shall not adhere to the connectors and hose.

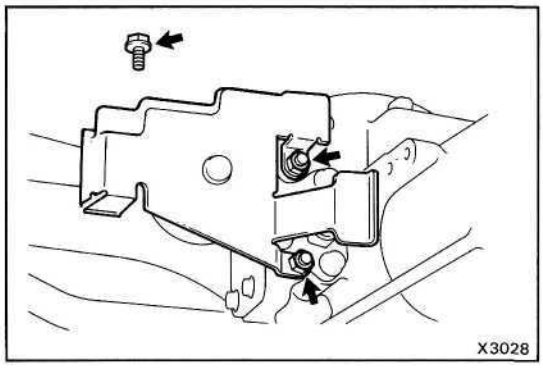

5. (w/ DIFFERENTIAL LOCK)
INSTALL ACTUATOR PROTECTOR

Install the protector with the two nuts and bolt.

Torque: Nut 360 kg-cm (26 ft-lb, 35 N-m)
Bolt 200 kg-cm (14 ft-lb, 20 N-m)

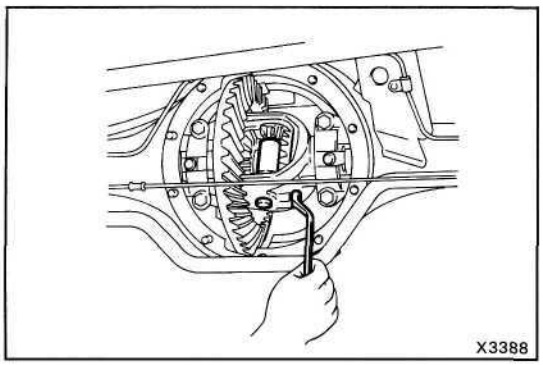

6. (2 PINION TYPE)
REMOVE PINION SHAFT AND PINION SPACER

(a) Remove the pinion shaft pin from the differential.

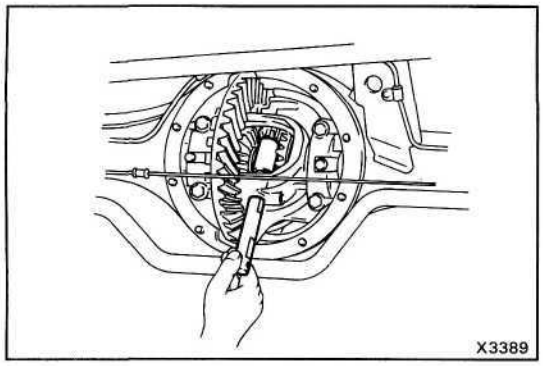

(b) Remove the pinion shaft and spacer.

HINT: When the pinion shaft is removed, the pinion gear and thrust washer will come off also.

7. CONNECT REAR PROPELLER SHAFT
(See step 14 on page SA-96)

8. INSTALL REAR AXLE SHAFTS
(Semi-Floating Type: See page SA-78)
(Full-Floating Type: See page SA-84)

9. INSTALL DRAIN PLUG

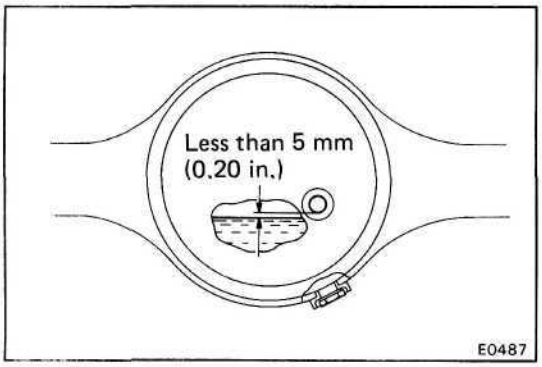

10. FILL DIFFERENTIAL WITH GEAR OIL

Fill with hypoid gear oil.

Oil type:
w/o LSD API GL-5
w/ LSD API GL-5 for LSD

Viscosity:
Above -18°C (0°F) SAE 90
Below -18°C (0°F) SAE 80W or 80W-90

Capacity: 3.25 liters (3.4 US qts, 2.9 Imp.qts)

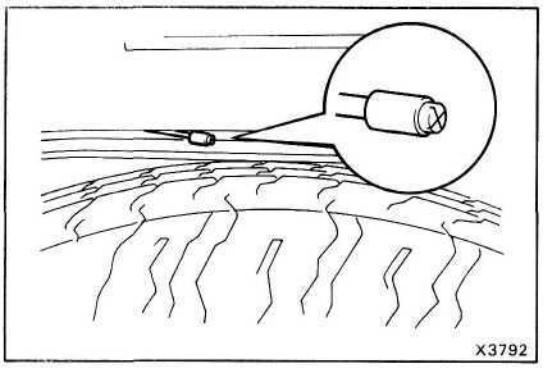

11. (w/ DIFFERENTIAL LOCK)
CHECK BLEEDER PLUG

Check that the bleeder plug at the point of the bleeder tube (above the left side frame) is not damage or worn.

Differential Carrier

COMPONENTS

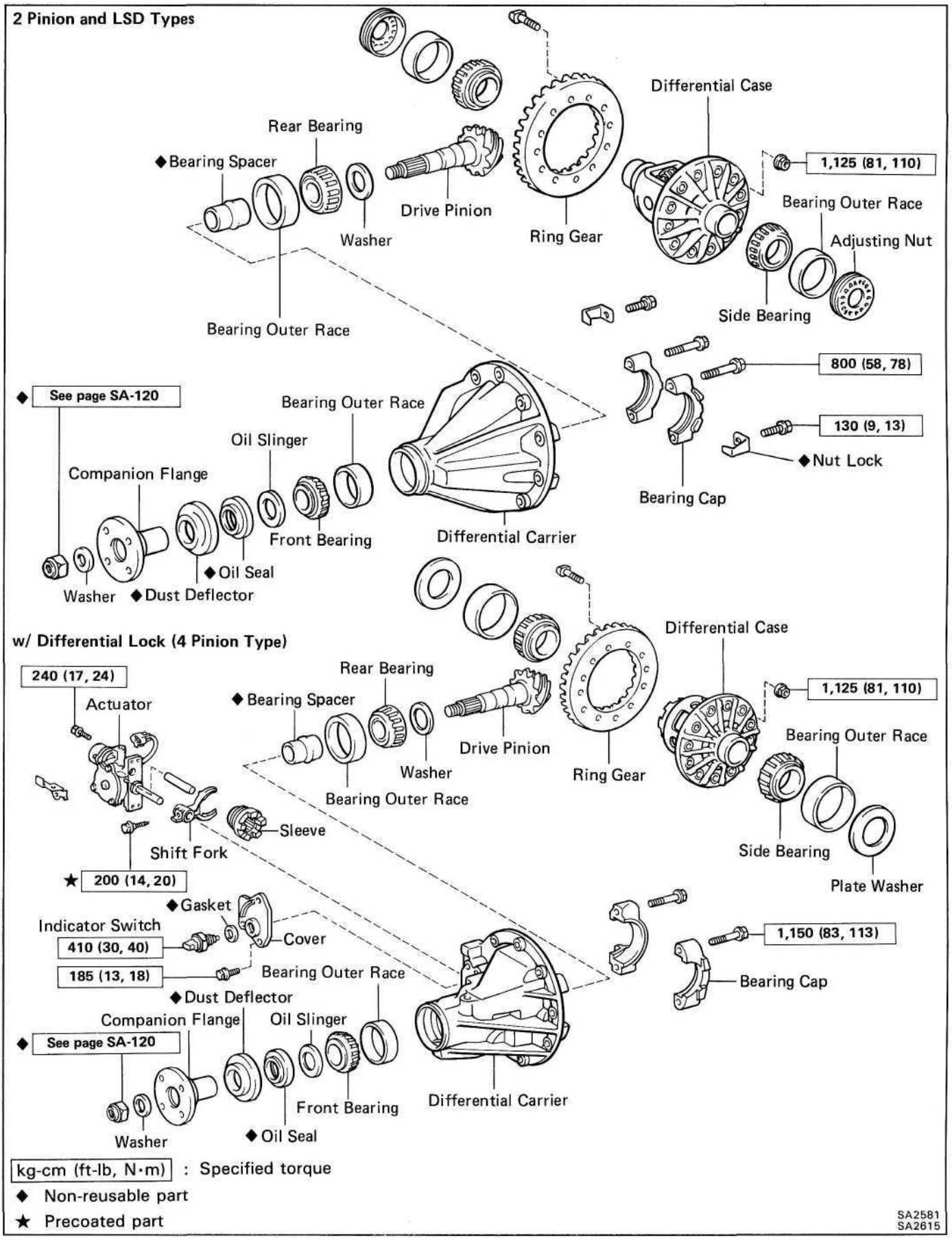

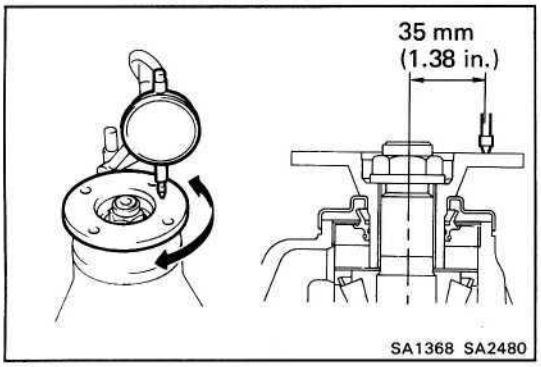

INSPECTION OF DIFFERENTIAL CARRIER

1. CHECK RUNOUT OF COMPANION FLANGE

Using a dial indicator, measure the vertical and lateral runout of the companion flange.

Maximum vertical runout: 0.10 mm (0.0039 in.)

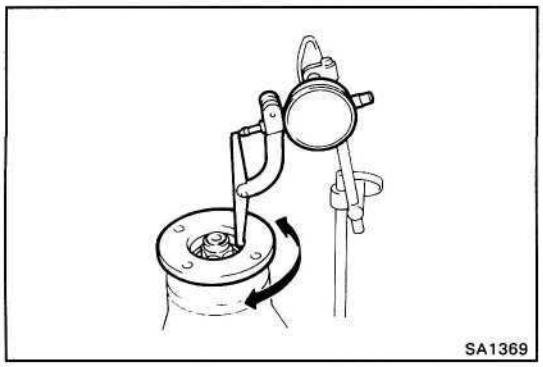

Maximum lateral runout: 0.10 mm (0.0039 in.)

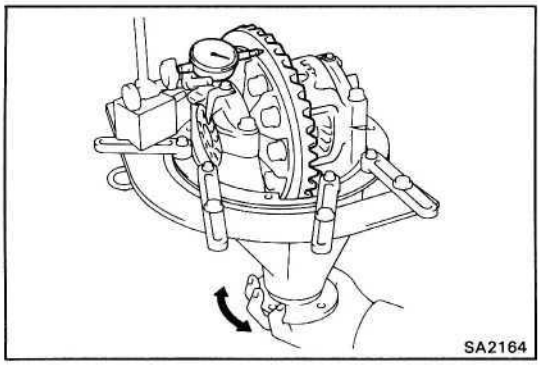

2. CHECK RING GEAR RUNOUT

If the runout is greater than maximum, replace the ring gear.

Maximum runout: 0.10 mm (0.0039 in.)

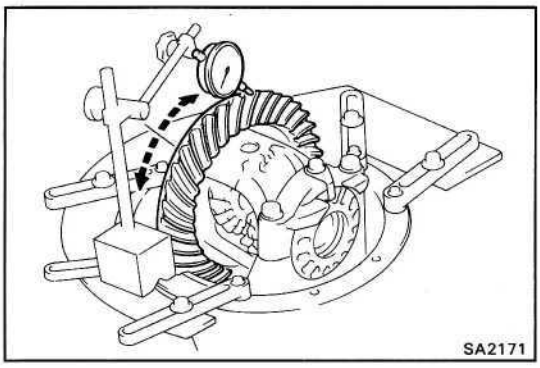

3. CHECK RING GEAR BACKLASH

If the backlash is not within specification, adjust the side bearing preload or repair as necessary.

Backlash: 0.15 - 0.20 mm (0.0059 - 0.0079 in.)

HINT: Perform the measurements at three or more positions around the circumference of the ring gear.

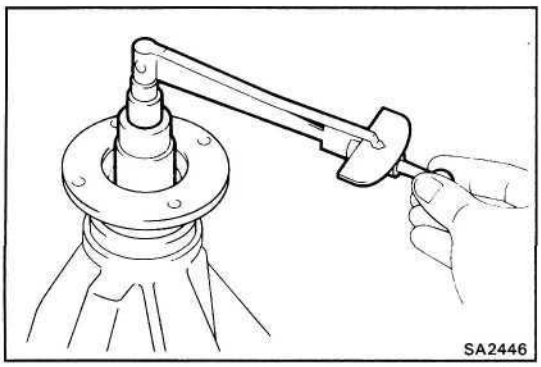

4. MEASURE DRIVE PINION PRELOAD

Measure the drive pinion preload using the backlash of the drive pinion and ring gear.

Preload (at starting): 7 — 10 kg-cm
(6.1 - 8.7 in.-lb, 0.7 - 1.0 N·m)

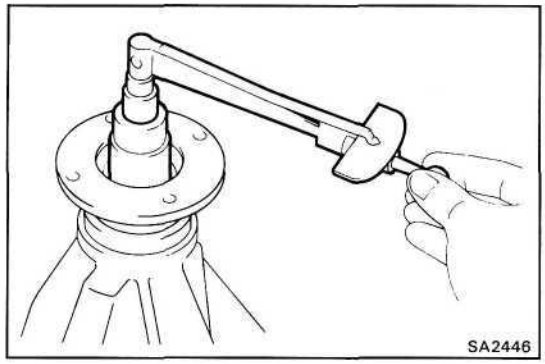

5. CHECK TOTAL PRELOAD

Using a torque meter, measure the total preload.

Total preload: In addition to drive pinion preload

2 pinion and LSD types

4 - 6 kg-cm (3.5 - 5.2 in.-lb, 0.4 - 0.6 N·m)

w/ Differential lock

3 - 7 kg-cm (2.6 - 6.1 in.-lb, 0.3 - 0.7 N·m)

If necessary, disassemble and inspect a differential.

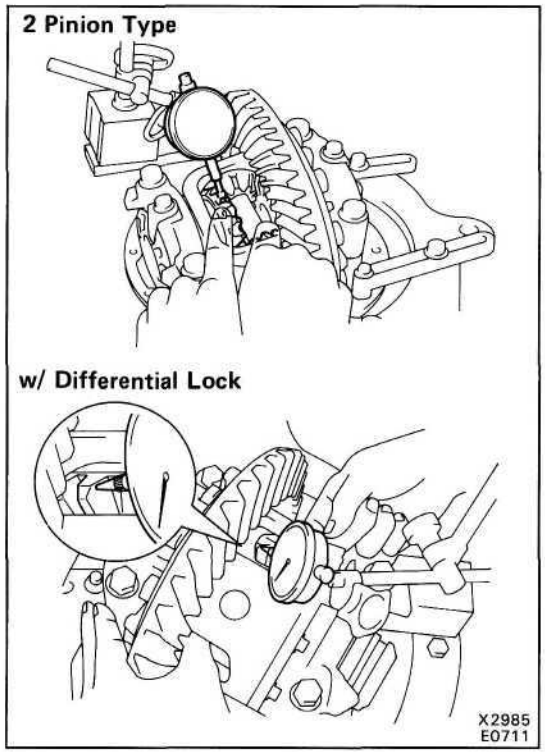

6. CHECK SIDE GEAR BACKLASH

Measure the side gear backlash while holding one pinion gear toward the case.

Standard backlash: 0.02 — 0.20 mm (0.0008 - 0.0079 in.)

If the backlash is out of specification, install the correct thrust washers. (See pages SA-125, 128)

7. INSPECT TEETH CONTACT BETWEEN RING GEAR AND DRIVE PINION

(See step 14 on page SA-118)

DISASSEMBLY OF DIFFERENTIAL CARRIER

(See page SA-101)

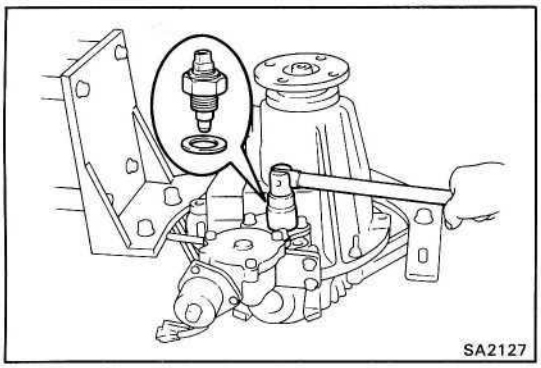

1. (w/ DIFFERENTIAL LOCK)
REMOVE INDICATOR SWITCH

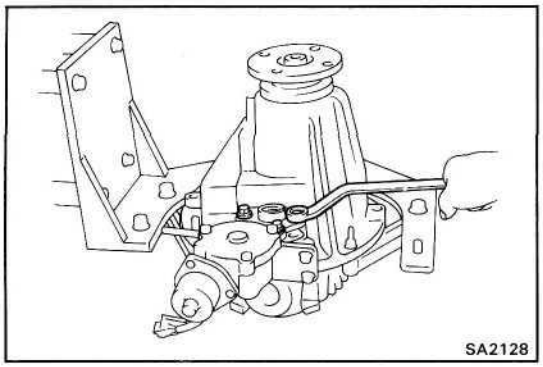

2. (w/ DIFFERENTIAL LOCK)
REMOVE COVER

(a) Remove the three bolts.

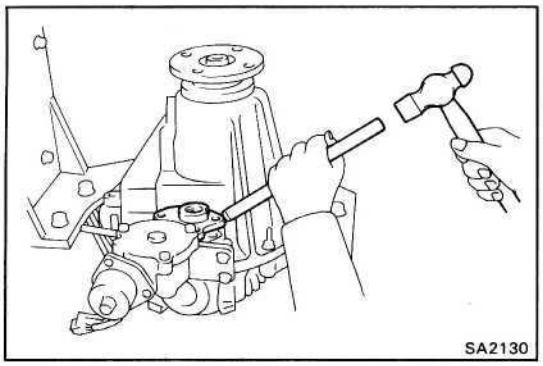

(b) Using a brass bar and hammer, remove the cover.

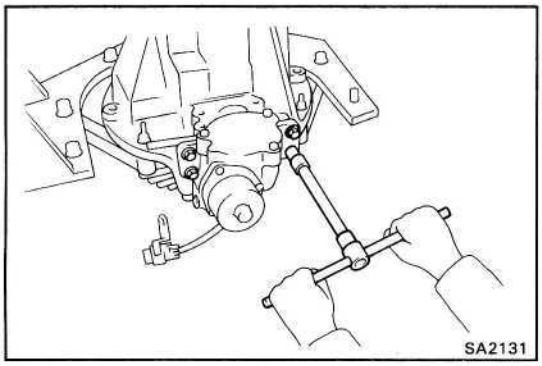

3. (w/ **DIFFERENTIAL LOCK)**
REMOVE SLEEVE

(a) Remove the four bolts.

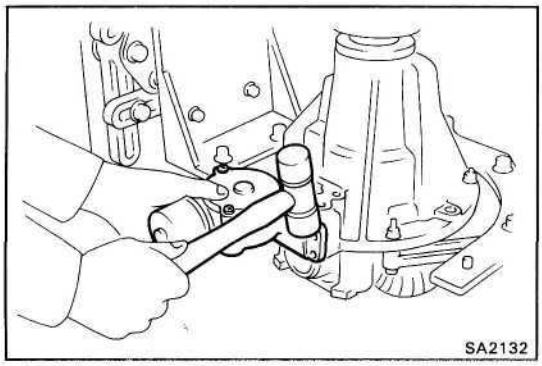

(b) Using a plastic hammer, tap off the actuator.

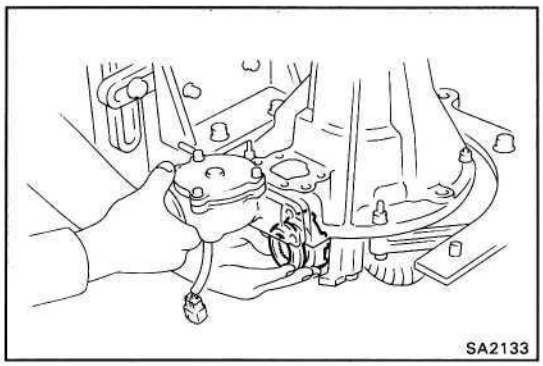

(c) Pull the actuator, remove the sleeve.

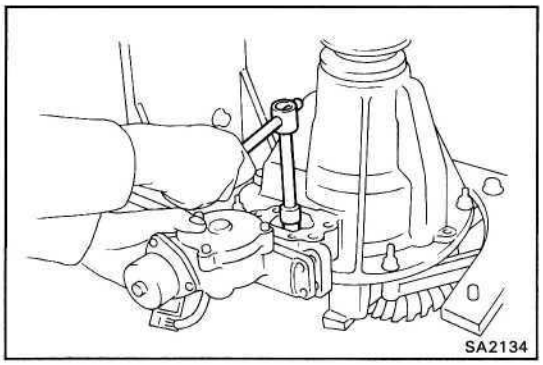

4. (w/ **DIFFERENTIAL LOCK)**
REMOVE ACTUATOR AND SHIFT FORK

(a) Remove the shift fork shaft bolt.

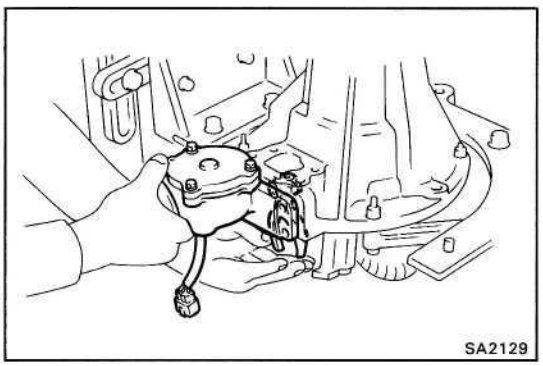

(b) Pull out the actuator, remove the shift fork.

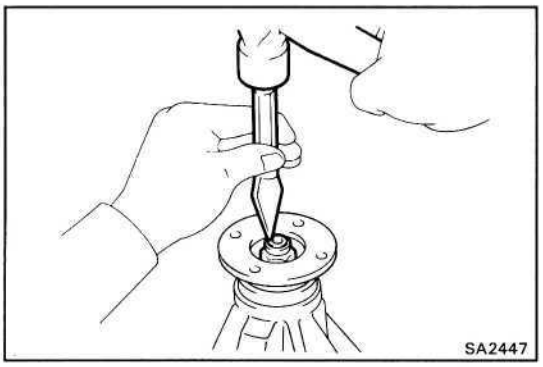

5. REMOVE COMPANION FLANGE

(a) Using a hammer and chisel, loosen the staked part of the nut.

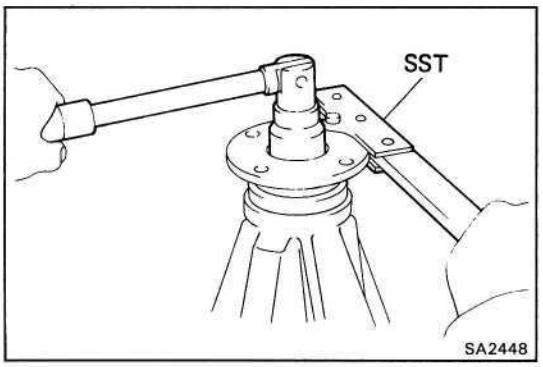

(b) Using SST to hold the flange, remove the nut and plate washer.

SST 09330-00021

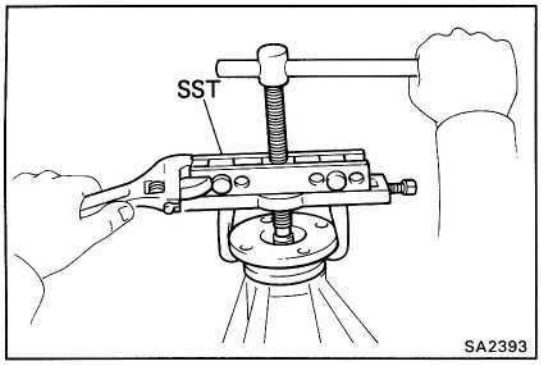

(c) Using SST, remove the companion flange.

SST 09950-20017

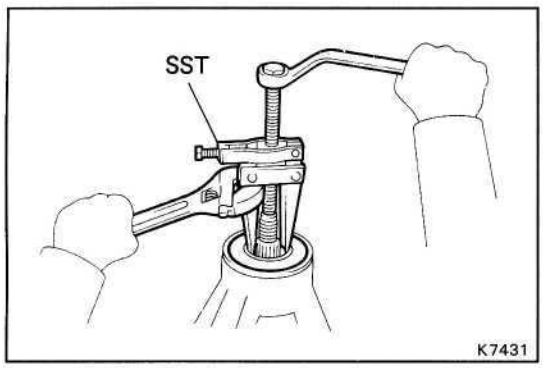

6. REMOVE FRONT OIL SEAL AND OIL SLINGER

(a) Using SST, remove the oil seal from the housing.

SST 09308-10010

(b) Remove the oil slinger.

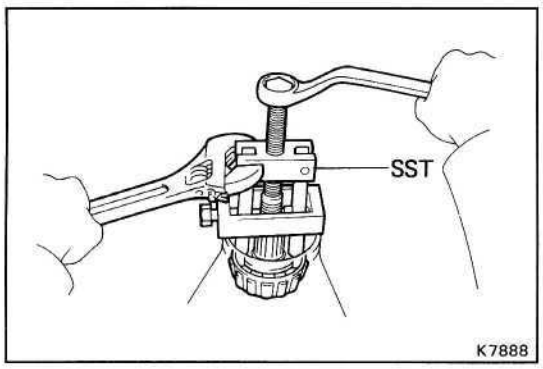

7. REMOVE FRONT BEARING

Using SST, remove the bearing from the housing.

SST 09556-22010

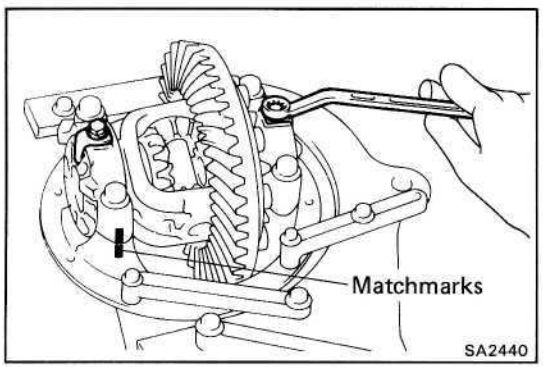

8. REMOVE DIFFERENTIAL CASE (2 PINION AND LSD TYPES)

(a) Place matchmarks on the bearing cap and differential carrier.

(b) Remove the two adjusting nut locks.

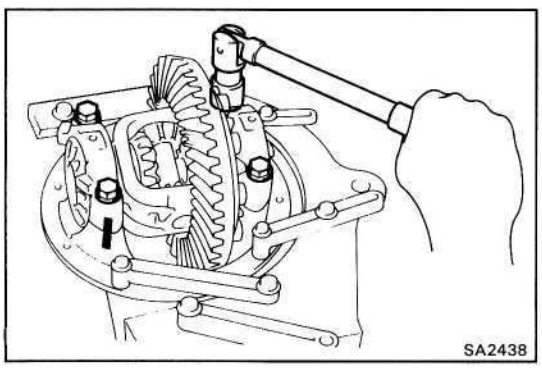

(c) Remove the four bolts and the two bearing caps.

(d) Remove the two adjusting nuts.

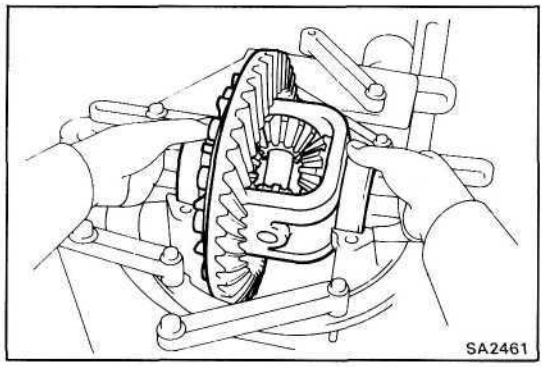

(e) Remove the differential case with the side bearing outer races from the differential carrier.

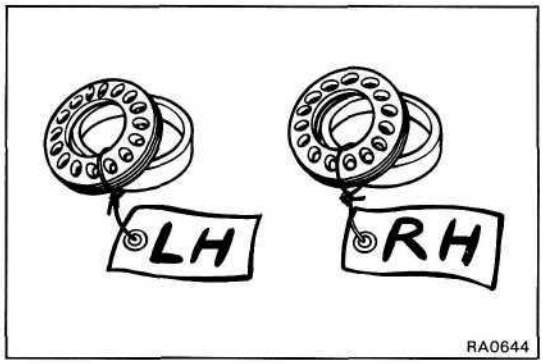

HINT: Tag the disassembled parts to show the location for reassembly.

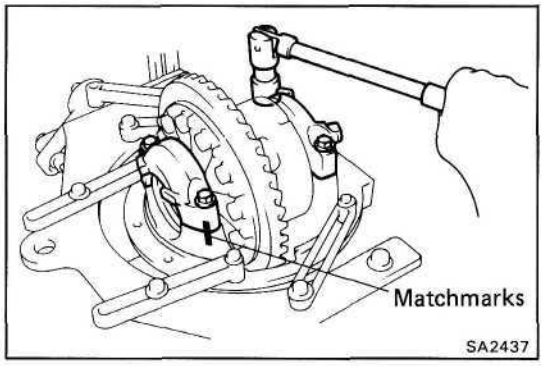

(w/ DIFFERENTIAL LOCK)

(a) Place matchmarks on the bearing cap and differential carrier.

(b) Remove the four bolts and the two bearing caps.

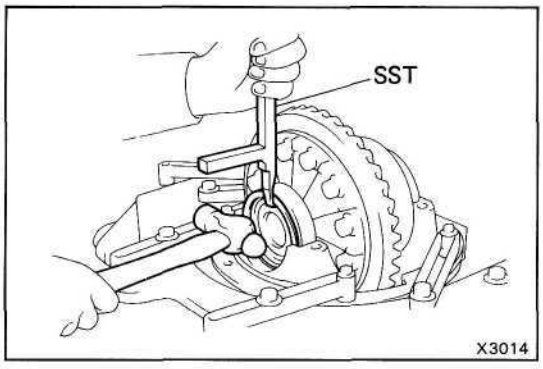

(c) Using SST, remove the plate washer.

SST 09504-22010

HINT: Measure the plate washer thickness and note it.

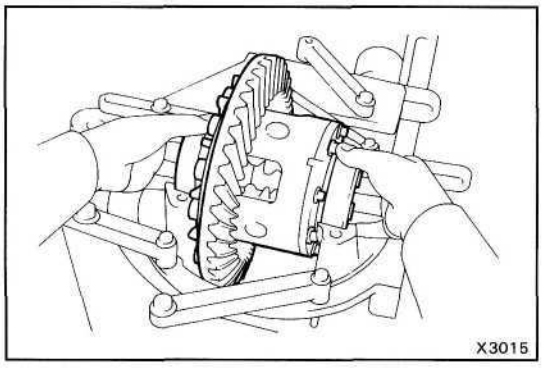

(d) Remove the differential case with the side bearing outer races from the differential carrier.

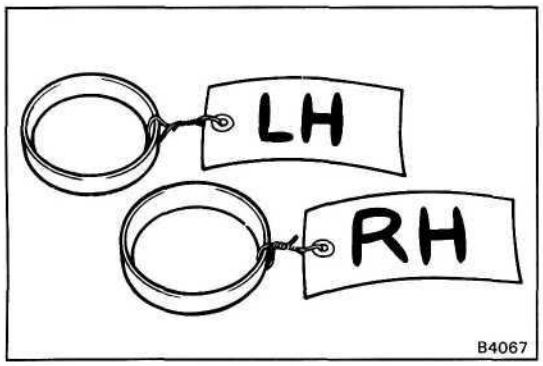

HINT: Tag the bearing outer races to show the location for reassembly.

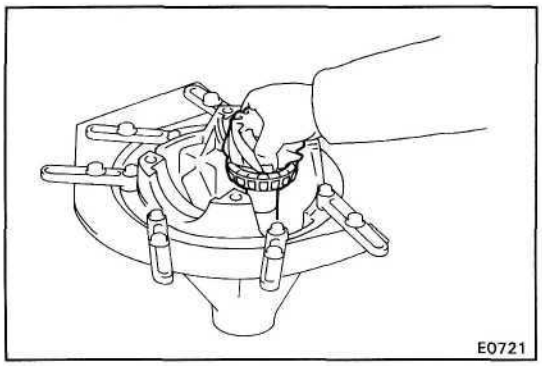

9. REMOVE DRIVE PINION AND BEARING SPACER

(a) Remove the drive pinion with the rear bearing.

(b) Remove the bearing spacer.

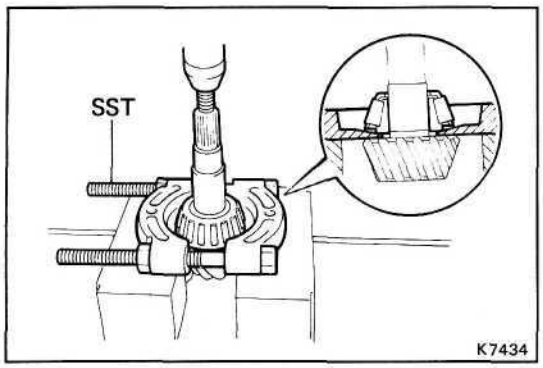

10. REMOVE DRIVE PINION REAR BEARING

(a) Using SST, press out the rear bearing from the drive pinion.

SST 09950-00020

HINT: If the drive pinion or ring gear are damaged replace them as a set.

(b) Remove the washer from the drive pinion.

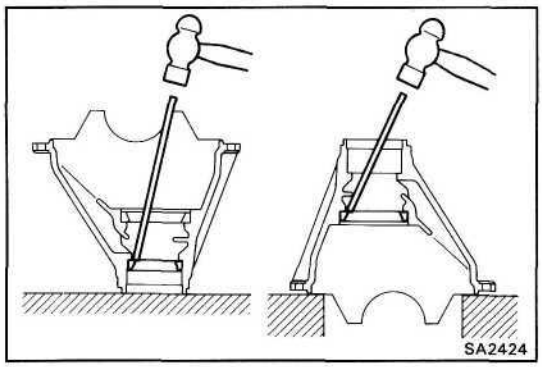

11. REMOVE FRONT AND REAR BEARING OUTER RACE

Using a hammer and brass bar, drive out the outer race from the carrier.

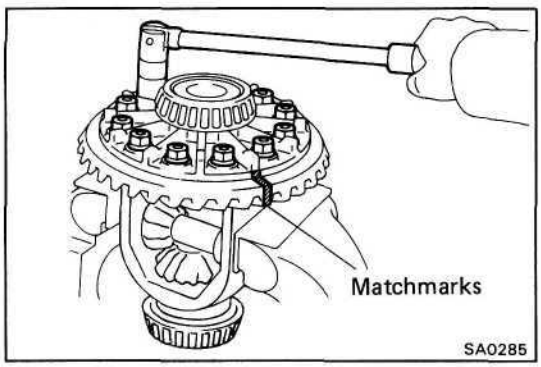

12. REMOVE RING GEAR

(a) Place matchmarks on the ring gear and differential case.

(b) Remove the twelve nuts and twelve bolts.

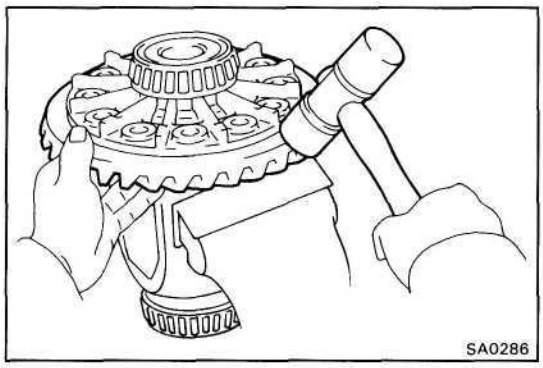

(c) Using a plastic hammer or copper hammer, tap on the ring gear to separate it from differential case.

13. CHECK DIFFERENTIAL CASE RUNOUT

(a) Place the bearing outer races on their respective bearings. Check that the left and right outer races are not interchanged.

(b) Install the differential case in the differential carrier.

(c) When there is no play left in the side bearings, install the adjusting nuts.

(d) Align the matchmarks on the bearing cap and differential carrier.

(e) Install and uniformly tighten the four bearing cap bolts in several passes.

(f) Using a dial indicator, measure the differential case runout.

Maximum runout: **0.07** mm (0.0028 in.)

(g) Remove the differential case.
(See step 8 on pages SA-106, 107)

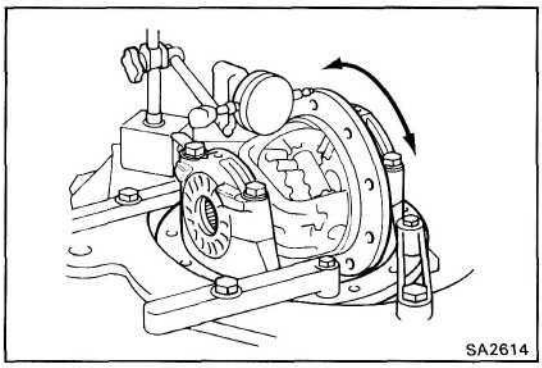

14. REMOVE SIDE BEARINGS (2 PINION AND LSD TYPES)

Using SST, remove the side bearing from the differential case.

SST 09950-20017

(w/ DIFFERENTIAL LOCK)

(a) Using SST, remove the side bearing (ring gear side).

SST 09950-20017

HINT: Fix the claws of SST to the notch in the differential case.

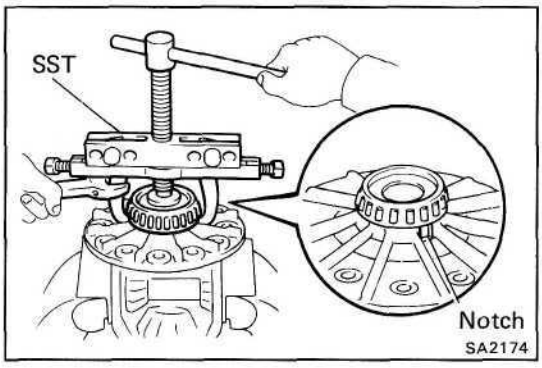

(b) Using four bolts and SST, remove the side bearing (cover side).

HINT: Fix the claws of SST to the notch in the differential case.

SST 09550-10012 (09252-10010, 09557-10010)

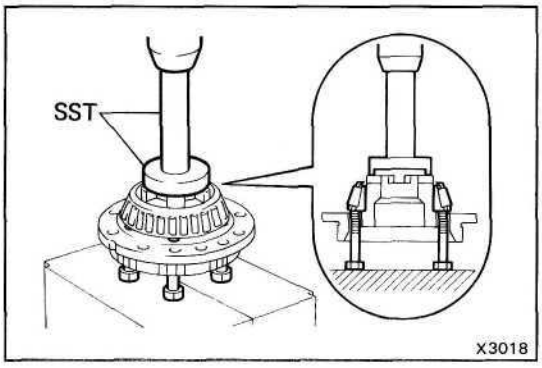

15. DISASSEMBLE DIFFERENTIAL CASE

2 pinion type: See page SA-124

w/ Differential lock
(4 pinion type): See page SA-126

LSD type : See page SA-129

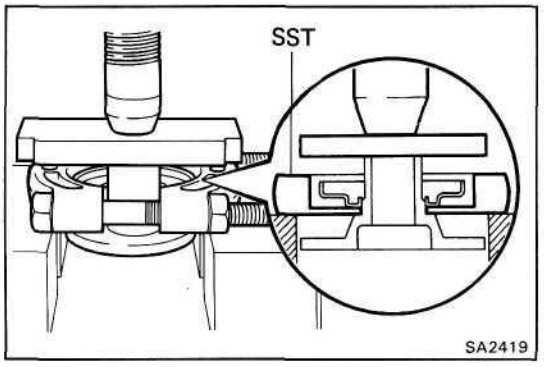

REPLACEMENT OF DIFFERENTIAL COMPONENTS

REPLACE COMPANION FLANGE DUST DEFLECTOR

(a) Using SST and a press, remove the dust deflector.

SST 09950-00020

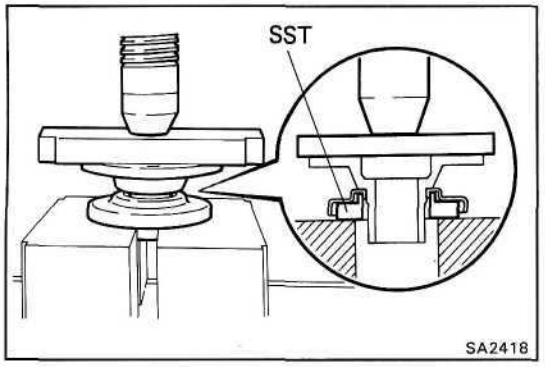

(b) Using SST and a press, install a new dust deflector.

SST 09726-40010

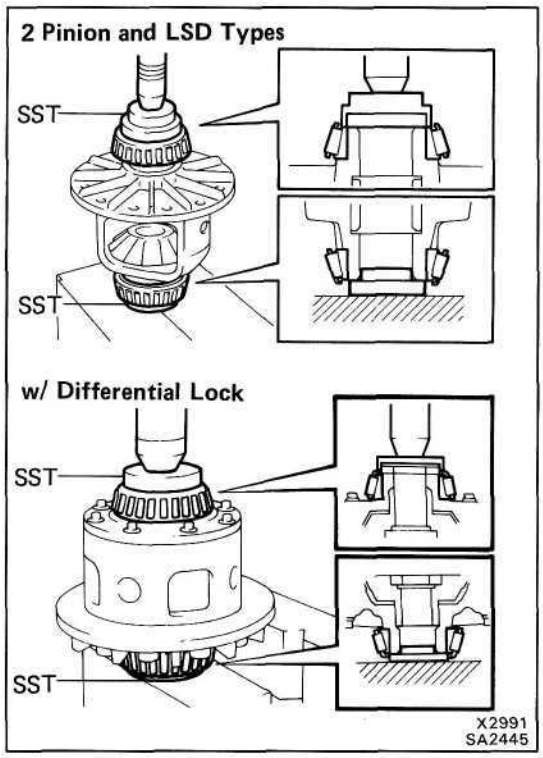

ASSEMBLY OF DIFFERENTIAL CARRIER

(See page SA-101)

1. INSTALL SIDE BEARINGS

Using SST and a press, install the two side bearings on the differential case.

SST 2 pinion and LSD types
09315-00021 and 09550-10012 (09558-10010)

w/ Differential lock
09550-60010 and 09550-10012 (09558-10010)

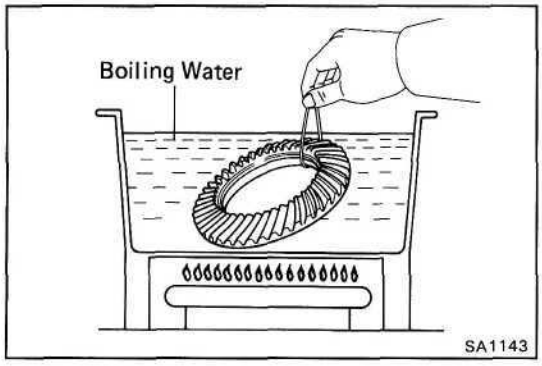

2. INSTALL RING GEAR ON DIFFERENTIAL CASE

(a) Clean the contact surfaces of the differential case and ring gear.

(b) Heat the ring gear in boiling water.

(c) After the moisture on the ring gear has completely evaporated, quickly install the ring gear to the differential case.

HINT: Align the matchmarks on the ring gear and the differential case.

(d) Temporarily install the twelve bolts and nuts so that the bolt holes in the ring gear and differential case are not misaligned.

NOTICE:

- **The ring gear set bolts should be not tighten until the ring gear has cooled sufficiently.**
- **Install the bolts so that the taped part of the bolt is on the ring gear side.**

(e) After the ring gear has cooled sufficiently, torque the ring gear set nuts.

Torque: 1,125 kg-cm (81 ft-lb, 110 N·m)

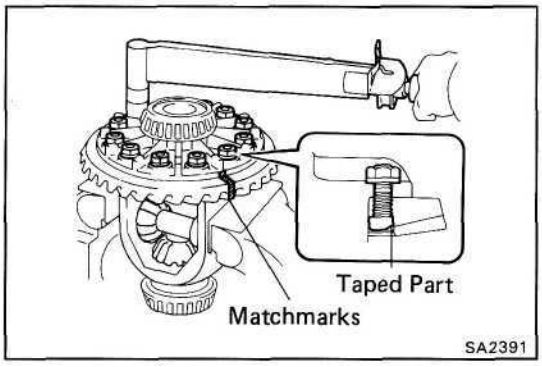

3. INSPECT RING GEAR RUNOUT

(a) Install the differential case onto the carrier.

(b) Install bearing caps. (See page SA-116)

(c) Using a dial indicator, measure the runout of ring gear.

Maximum runout: 0.10 mm (0.0039 in.)

(d) Remove the differential case.
(See step 8 on page SA-106)

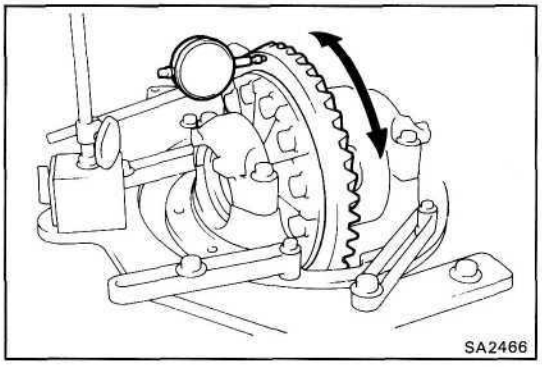

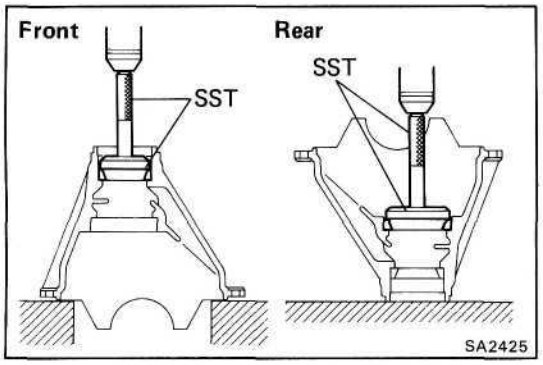

4. INSTALL DRIVE PINION FRONT AND REAR BEARING OUTER RACES

Using SST and a press, install the outer races.

SST 09608-35014

Front (09608-06020, 09608-06110)
Rear (09608-06020,09608-06180)

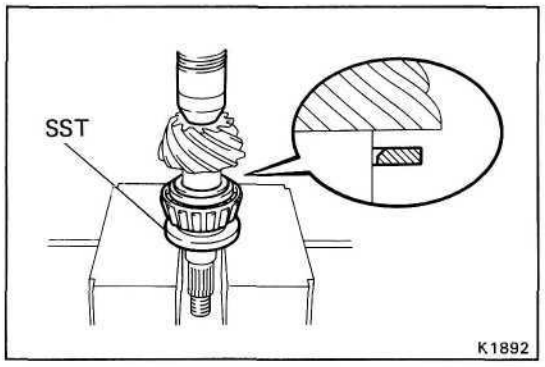

5. **INSTALL DRIVE PINION REAR BEARING**

(a) Install the washer on the drive pinion with the chamfered end facing the pinion gear.

HINT: First fit a washer with the same thickness as the washer which was removed, then after checking the teeth contact pattern, replace the washer with one of a different thickness if necessary.

(b) Using SST and a press, install the rear bearing to the drive pinion.

SST 09506-35010

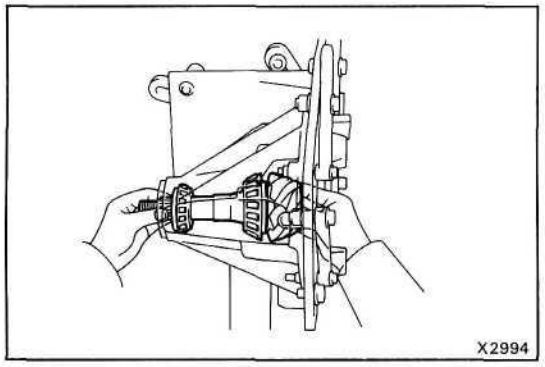

6. TEMPORARILY ADJUST DRIVE PINION PRELOAD

(a) Install the drive pinion, front bearing and oil slinger.

HINT: Assemble the spacer and oil seal after adjusting the teeth contact pattern.

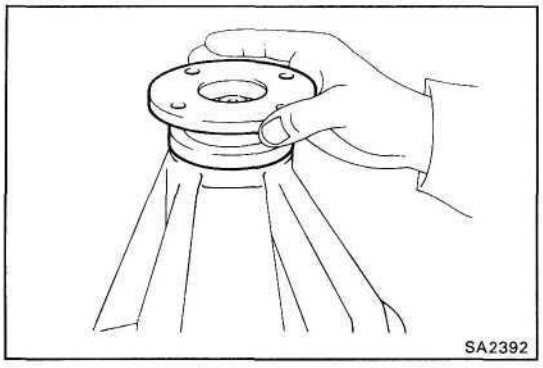

(b) Install the companion flange.

(c) Coat the threads of the nut with MP grease.

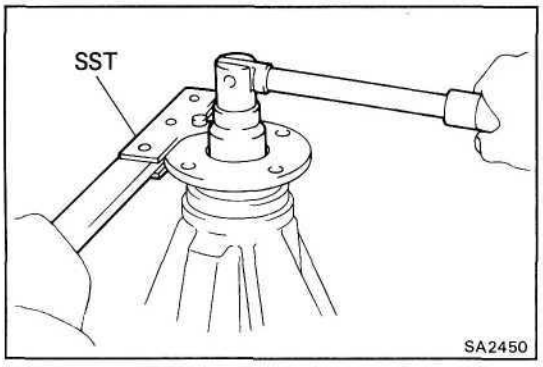

(d) Adjust the drive pinion preload by tightening the companion flange nut.

HINT: Using SST to hold the flange, tighten the nut.

SST 09330-00021

NOTICE: As there is no spacer, tighten the nut a little at a time, being careful not to overtighten it.

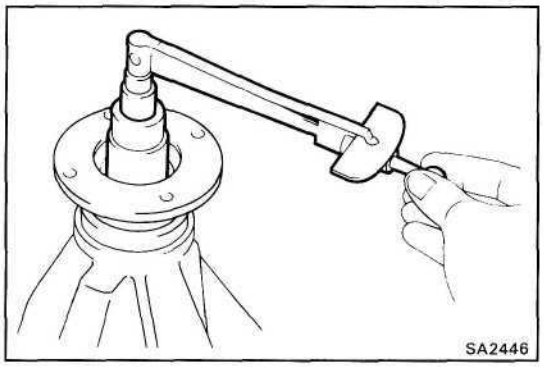

(e) Using a torque meter, measure the preload.

Preload (at starting):

New bearing

13 — 20 kg-cm

(11.3-17.4 in.-lb, 1.3 - 2.0 N·m)

Reused bearing

7 — 10 kg-cm

(6.1 - 8.7 in.-lb, 0.7 - 1.0 N·m)

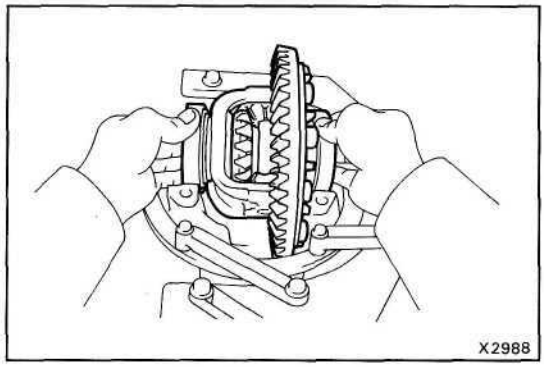

7. INSTALL DIFFERENTIAL CASE IN CARRIER (2 PINION AND LSD TYPES)

(a) Place the bearing outer races on their respective bearings. Make sure that the left and right outer races are not interchanged.

(b) Install the case in the carrier.

HINT: Make sure that there is backlash between the ring gear and drive pinion.

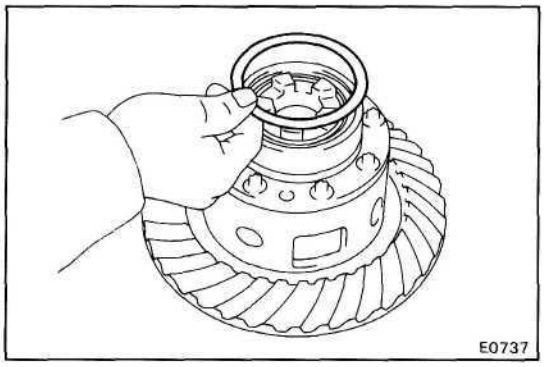

(w/ DIFFERENTIAL LOCK)

(a) Place the bearing outer races on their respective bearings. Make sure the left and right races are not interchanged.

(b) Install the assembled plate washer onto the side bearing.

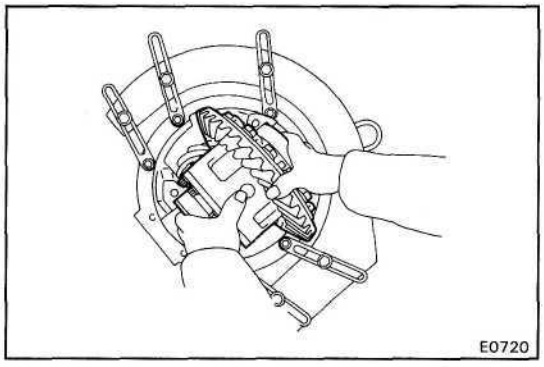

(c) Install the differential case in the carrier.

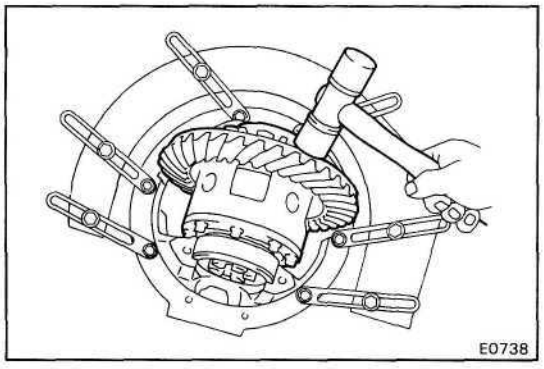

(d) Snug down the washer and bearing by tapping on the ring gear with a plastic hammer.

HINT: If it is difficult to install the differential case into the carrier, replace the plate washer with a thinner one. However, select a plate washer that allows no clearance between it and the carrier.

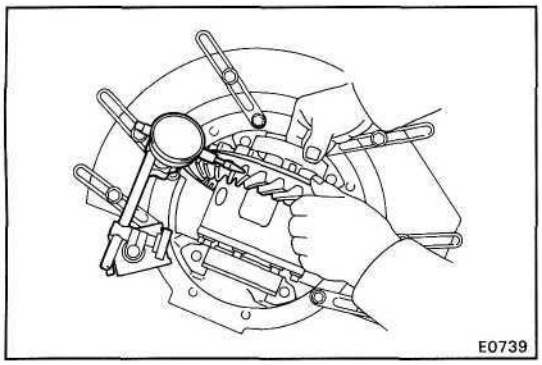

8. (w/ DIFFERENTIAL LOCK)
ADJUST RING GEAR BACKLASH

(a) Hold the side bearing of the ring gear side and measure the backlash.

Backlash (reference): 0.15 mm (0.0059 in.)

(b) Select a case cover side plate washer using the backlash as reference.

Side plate washer thickness

Mark	Thickness mm (in.)	Mark	Thickness mm (in.)	Mark	Thickness mm (in.)	Mark	Thickness mm (in.)
1	2.67 (0.1051)	7	2.85 (0.1122)	13	3.03 (0.1193)	19	3.21 (0.1264)
2	2.70 (0.1063)	8	2.88 (0.1134)	14	3.06 (0.1205)	20	3.24 (0.1276)
3	2.73 (0.1075)	9	2.91 (0.1146)	15	3.09 (0.1217)	21	3.27 (0.1287)
4	2.76 (0.1087)	10	2.94 (0.1157)	16	3.12 (0.1228)	22	3.30 (0.1299)
5	2.79 (0.1098)	11	2.97 (0.1169)	17	3.15 (0.1240)	23	3.33 (0.1311)
6	2.82 (0.1110)	12	3.00 (0.1181)	18	3.18 (0.1252)		

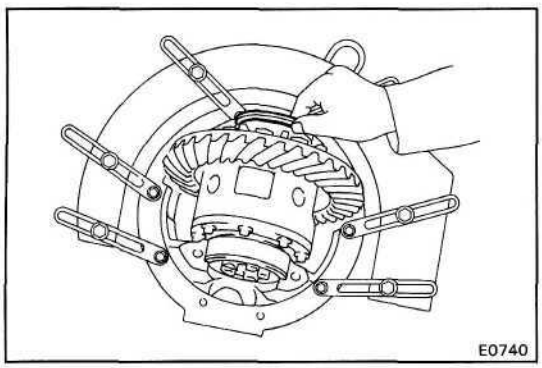

(c) Select a ring gear side plate washer of a thickness which eliminates any clearance between the plate washer and carrier.

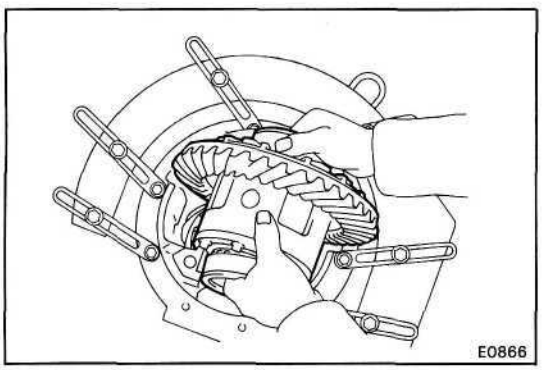

(d) Remove the plate washers and differential case.

(e) Install the plate washer into the lower part of the carrier.

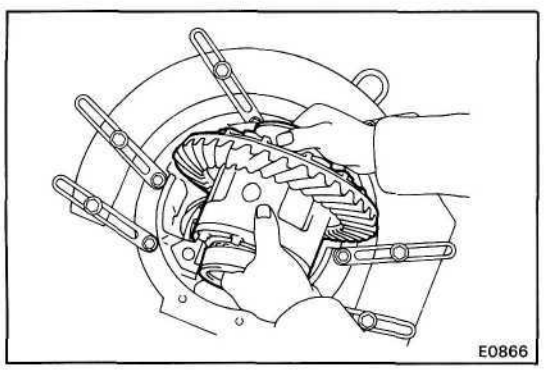

(f) Place the plate washer onto the differential case together with the outer race, and install the differential case with the outer race into the carrier.

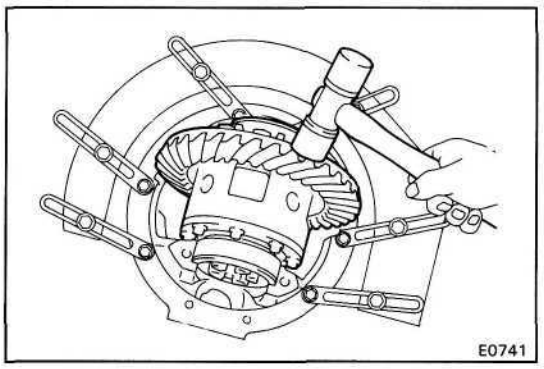

(g) Using a plastic hammer, snug down the washer and bearing by tapping the ring gear.

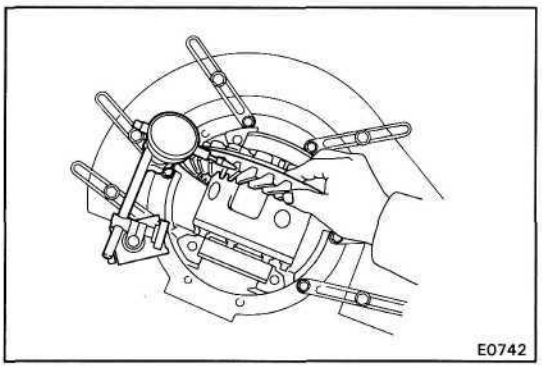

(h) Measure the ring gear backlash.

Backlash: 0.15 - 0.20 mm (0.0059 - 0.0079 in.)

If not within specification, adjust by either increasing or decreasing the number of washers on both sides by an equal amount.

HINT : There should be no clearance between the plate washer and case.

Insure that there is ring gear backlash.

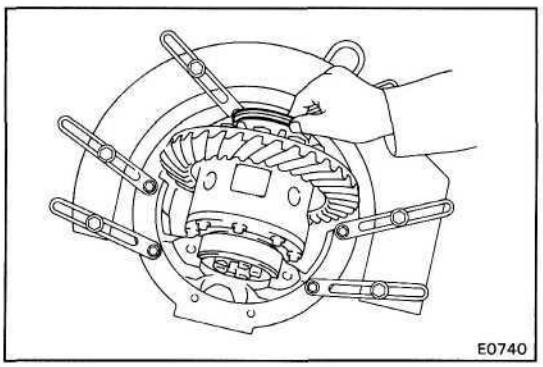

9. (w/ DIFFERENTIAL LOCK)
ADJUST SIDE BEARING PRELOAD

(a) After adjustment with the backlash as reference, remove the ring gear side plate washer.

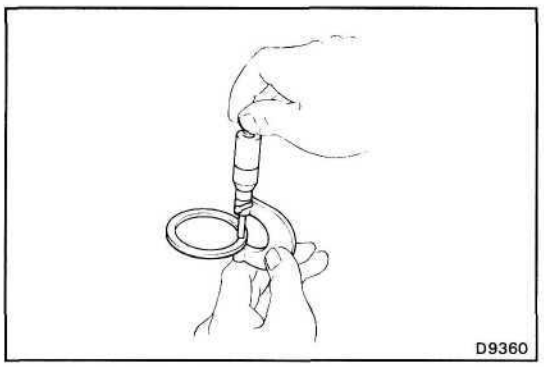

(b) Measure the thickness of the removed plate washer.

(c) Install a new thicker washer of 0.06 — 0.09 mm (0.0024 - 0.0035 in.) than the washer removed.

HINT: Select a washer which can be pressed in 2/3 of the way with finger.

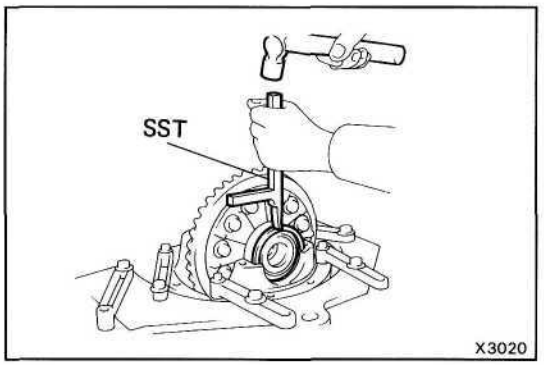

(d) Using SST, tap in the plate washer.

SST 09504-22010

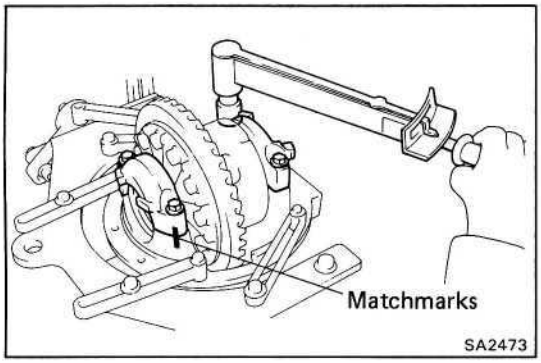

(e) Align the matchmarks on the cap and carrier.

(f) Tighten the four bearing cap bolts to the specified torque.

Torque: 1,150 kg-cm (83 ft-lb, 113 N·m)

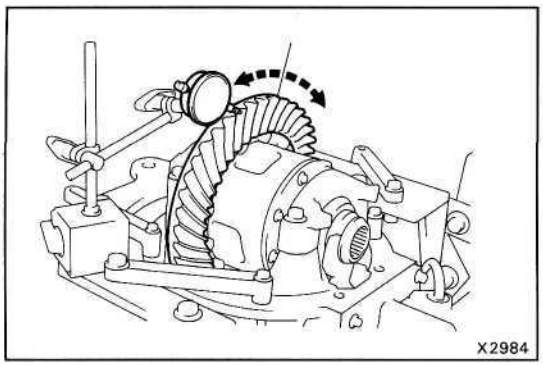

(g) Using a dial indicator, adjust the ring gear backlash until it is within specification.

Backlash: 0.15 - 0.20 mm (0.0059 - 0.0079 in.)

If not within standard, follow the procedure listed below.

If backlash is greater than specification:

Replace the cover side washer with a thinner washer. When doing so replace the ring gear side plate washer with one having a thickness equalling the amount the cover side plate washer thickness was decreased.

If backlash is less than specification:

Replace the cover side plate washer with a thicker washer. When doing so replace the ring gear side plate washer with one having a thinness equalling the amount the cover side plate washer thickness was increased.

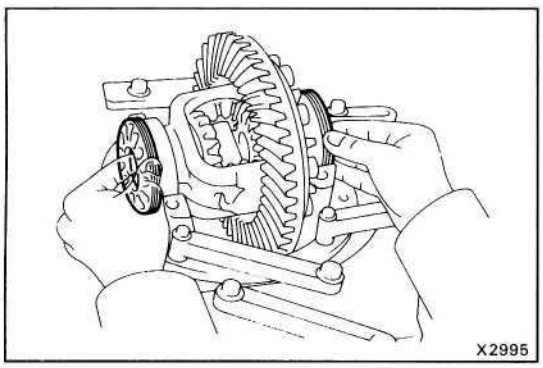

10. (2 PINION AND LSD TYPES) INSTALL ADJUSTING NUTS

Install the adjusting nuts on the carrier, making sure that the nuts are threaded properly.

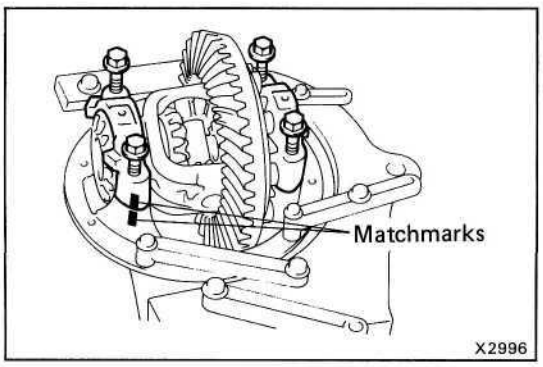

11. (2 PINION AND LSD TYPES) INSTALL BEARING CAPS

Align the matchmarks on the cap and carrier. Screw in the two bearing cap bolts two or three turns and press down the bearing cap by hand.

HINT: If the bearing cap does not fit tightly on the carrier, the adjusting nuts are not threaded properly.

Reinstall the adjusting nuts if necessary.

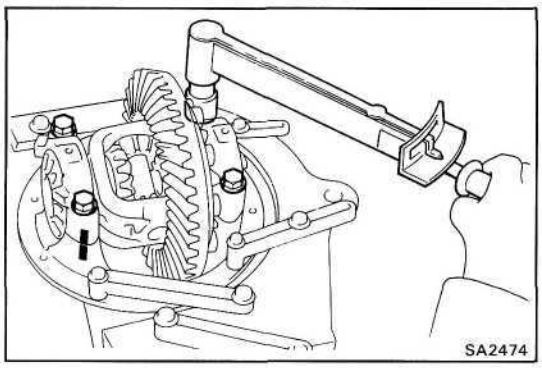

12. (2 PINION AND LSD TYPES)
ADJUST SIDE BEARING PRELOAD

(a) Tighten the four bearing cap bolts to the specified torque, then loosen them to the point where they can be turned by hand.

Torque: 800 kg-cm (58 ft-lb, 78 N-m)

(b) Fully tighten the four bearing cap bolts by hand.

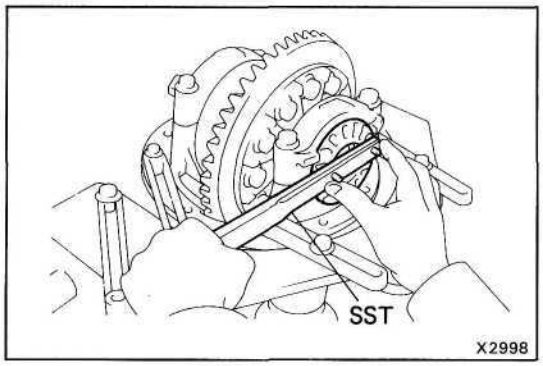

(c) Using SST, tighten the adjusting nut on the ring gear side until the ring gear has a backlash of about 0.2 mm (0.008 in.).

SST 09504-00011

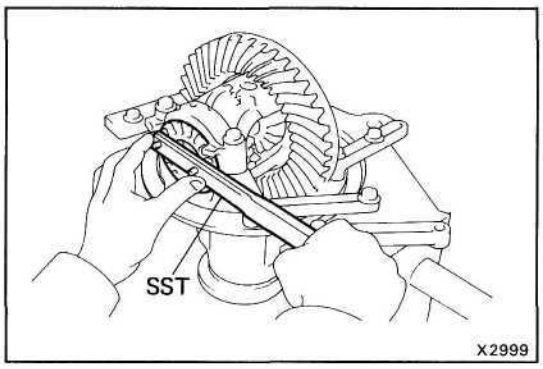

(d) While turning the ring gear, use SST to fully tighten the adjusting nut on the drive pinion side. After the bearings are settled, loosen the adjusting nut on the drive pinion side.

SST 09504-00011

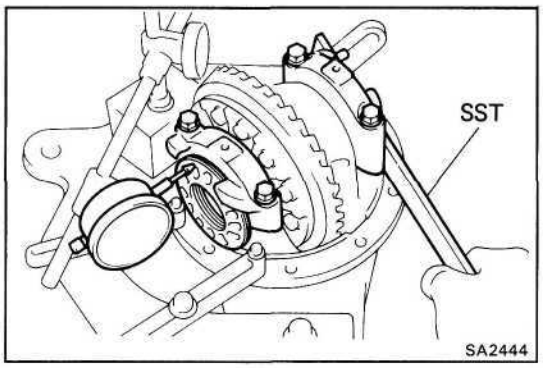

(e) Place a dial indicator on the top of the adjusting nut on the ring gear side.

(f) Adjust the side bearing for zero preload by tightening the other adjusting nut until the pointer on the indicator begins to move.

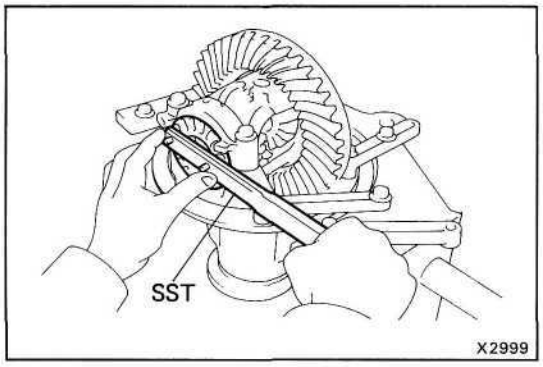

(g) Tighten the adjusting nut 1 — 1 ^{1}/a notches from the zero preload position.

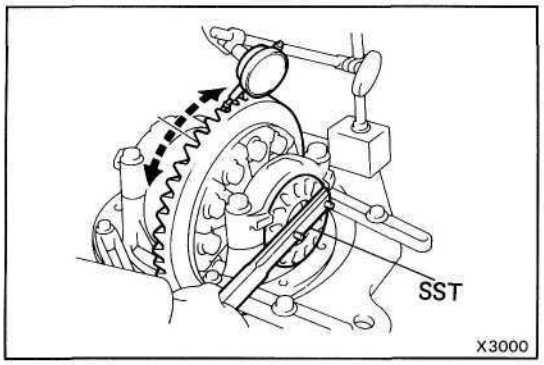

(h) Using a dial indicator, adjust the ring gear backlash until it is within specification.

Backlash: 0.15 - 0.20 mm (0.0059 - 0.0079 in.)

HINT: The backlash is adjusted by turning the left and right adjusting nuts equal amounts. For example, loosen the nut on the left side one notch and tighten the nut on the right side one notch.

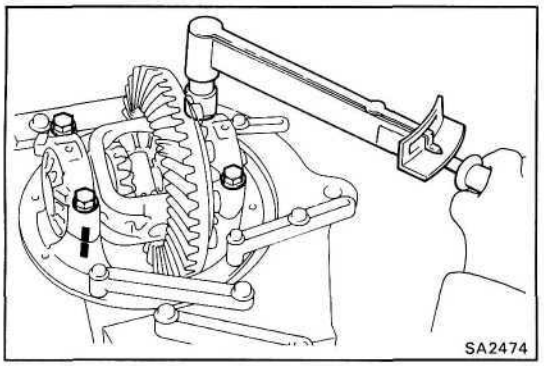

(i) Torque the bearing cap bolts.

Torque: 800 kg-cm (58 ft-lb, 78 N·m)

(j) Recheck the ring gear backlash.

Backlash: 0.15 - 0.20 mm (0.0059 - 0.0079 in.)

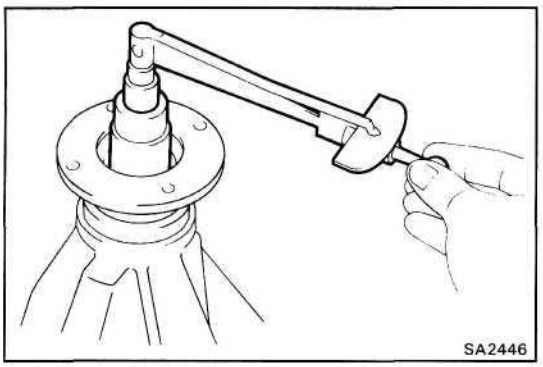

13. MEASURE TOTAL PRELOAD

Using a torque meter, measure the total preload.

Total preload (at starting): Add drive pinion preload
2 pinion and LSD types
4 - 6 kg-cm (3.5 - 5.2 in.-lb, 0.4 - 0.6 N·m)
w/ Differential lock
3 - 7 kg-cm (2.6 - 6.1 in.-lb, 0.3 - 0.7 N·m)

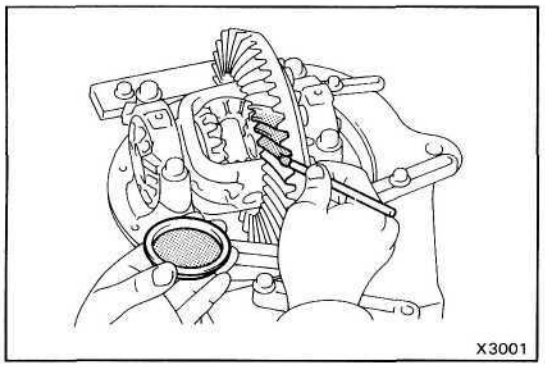

14. INSPECT TEETH CONTACT BETWEEN RING GEAR AND DRIVE PINION

(a) Coat 3 or 4 teeth at three different positions on the ring gear with red lead.

(b) Hold the companion flange firmly and rotate the ring gear in both directions.

(c) Inspect the teeth pattern.

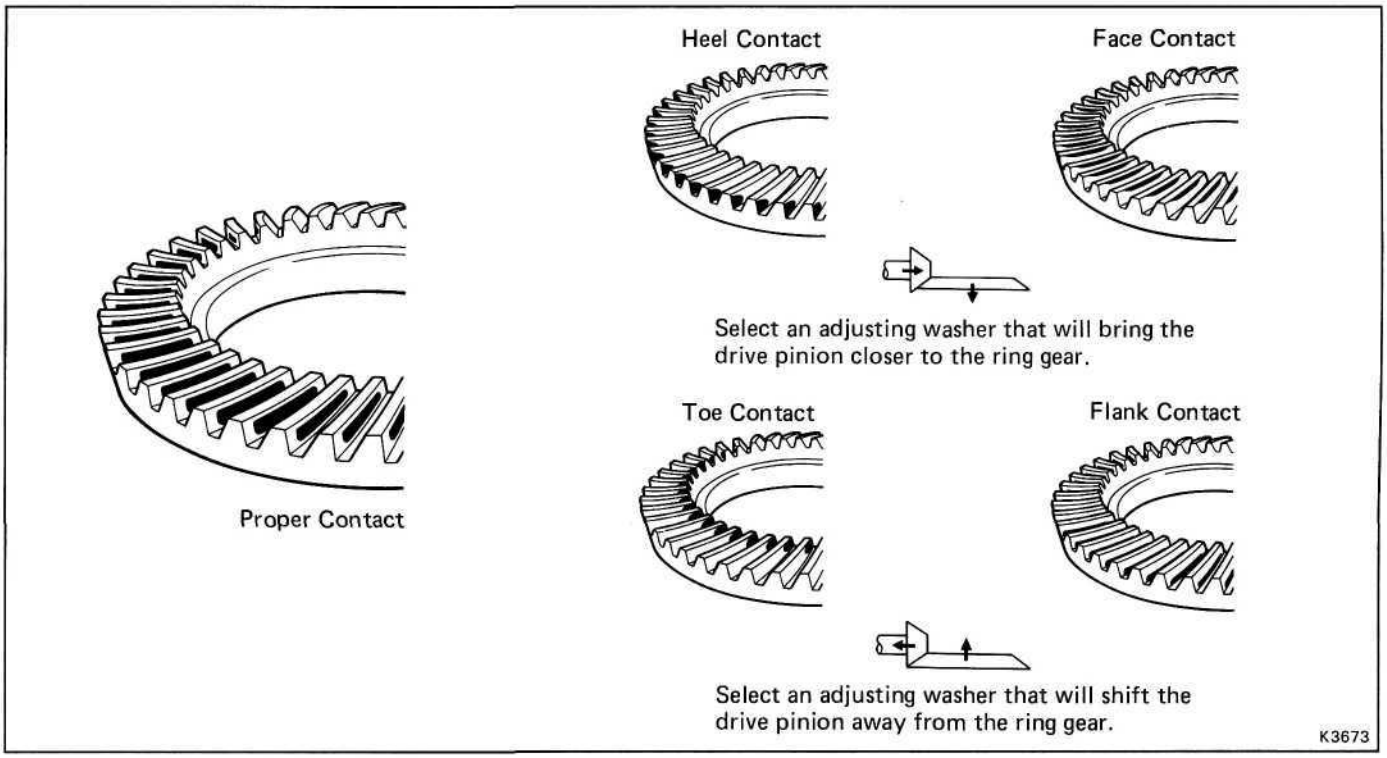

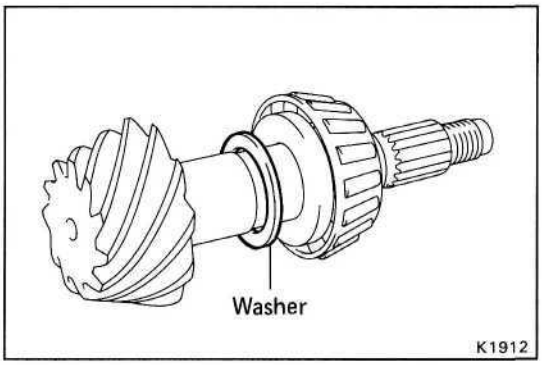

If the teeth are not contacting properly, use the following chart to select a proper washer for correction.

Washer thickness	mm (in.)
1.05 (0.0413)	1.35 (0.0531)
1.10 (0.0433)	1.40 (0.0551)
1.15 (0.0453)	1.45 (0.0571)
1.20 (0.0472)	1.50 (0.0591)
1.25 (0.0492)	1.55 (0.0610)
1.30 (0.0512)	

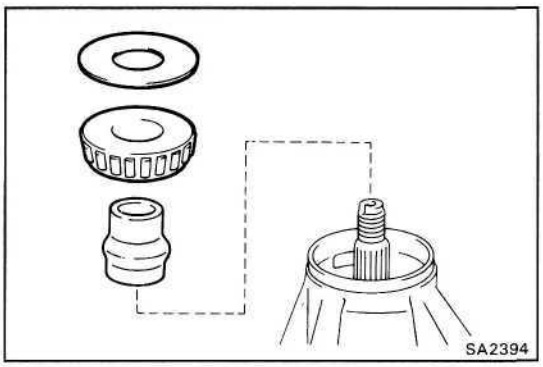

15. INSTALL BEARING SPACER

(a) Remove the companion flange.
(See step 5 on page SA-105)

(b) Remove the oil slinger and front bearing.
(See steps 6, 7 on page SA-106)

(c) Install a new bearing spacer.

(d) Install the front bearing and oil slinger.

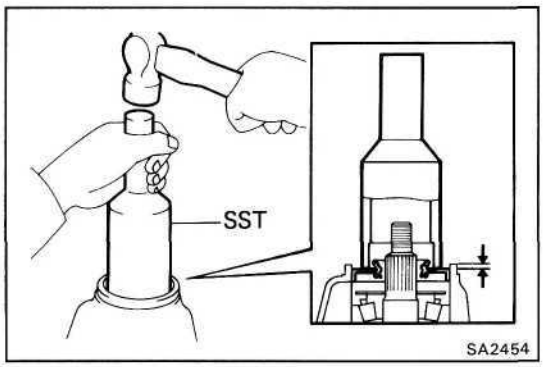

16. INSTALL OIL SEAL

(a) Using SST and a hammer, install a new oil seal.

SST 09214-76011

Oil seal drive in depth: 1.0 mm (0.039 in.)

(b) Coat the lip of oil seal with MP grease.

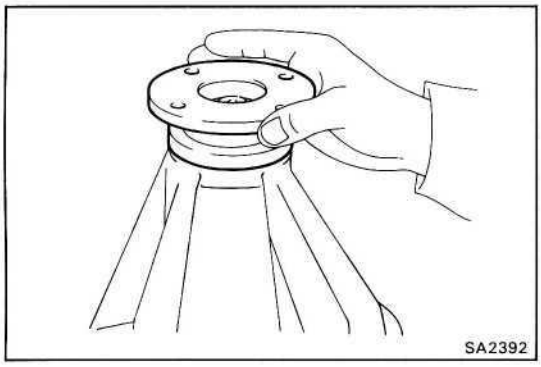

17. INSTALL COMPANION FLANGE

(a) Install the companion flange.

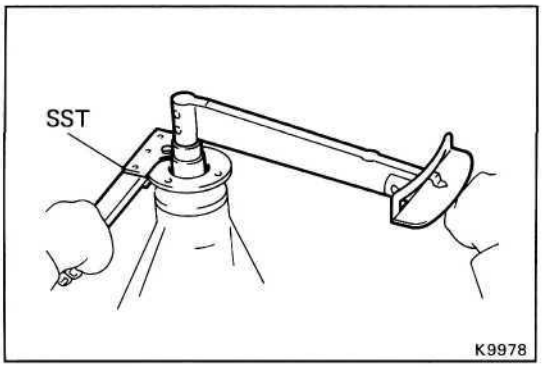

(b) Install the plate washer and a new nut.

HINT: Coat the threads of nut with gear oil.

(c) Using SST to hold the flange, tighten the nut.

SST 09330-00021

Torque: 2,500 kg-cm (181 ft-lb, 245 N·m)

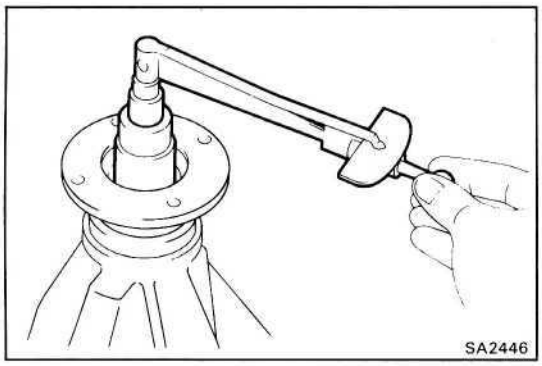

18. ADJUST DRIVE PINION PRELOAD

Using a torque meter, measure the preload of the backlash between the drive pinion and gear.

Preload (at starting):

New bearing

13 - 20 kg-cm

(11.3 - 17.4 in.-lb, 1.3 - 2.0 N·m)

Reused bearing

7 — 10 kg-cm

(6.1 - 8.7 in.-lb, 0.7 - 1.0 N·m)

If the preload is greater than specification, replace the bearing spacer.

If the preload is less than specification, retighten the nut 130 kg-cm (9 ft-lb, 13 N-m) a little at a time until the specified preload is reached.

If the maximum torque is exceeded while retightening the nut, replace the bearing spacer and repeat the preload procedure. Do not back off the pinion nut to reduce the preload.

Maximum torque: 4,500 kg-cm (326 ft-lb, **441 N·m)**

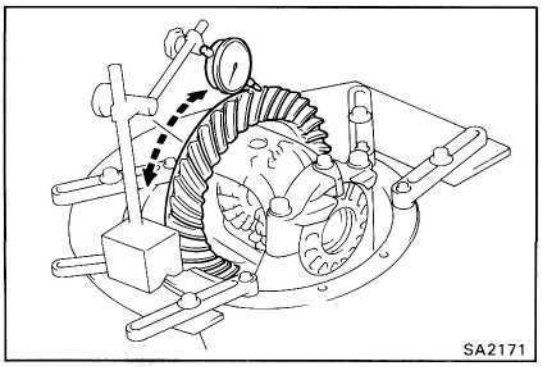

19. RECHECK RING GEAR BACKLASH
(See step 3 on page SA-102)

20. RECHECK TEETH CONTACT BETWEEN RING GEAR AND DRIVE PINION
(See step 14 on page SA-118)

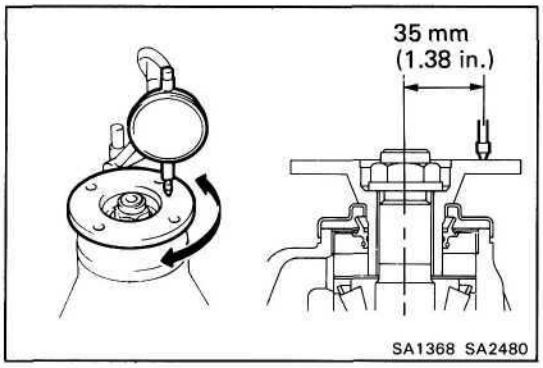

21. CHECK RUNOUT OF COMPANION FLANGE

Using a dial indicator, measure the vertical and lateral runout of the companion flange.

Maximum vertical runout: 0.10 mm (0.0039 in.)

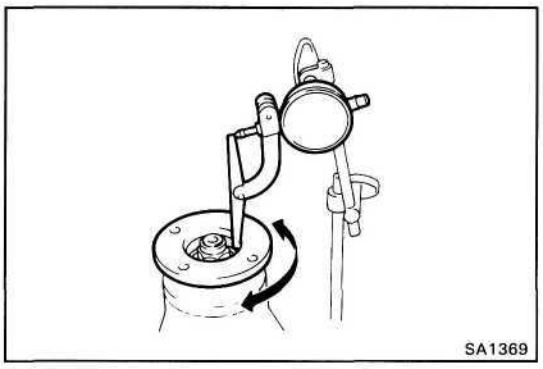

Maximum lateral runout: 0.10 mm (0.0039 in.)

If the runout is greater than the maximum, inspect the bearing.

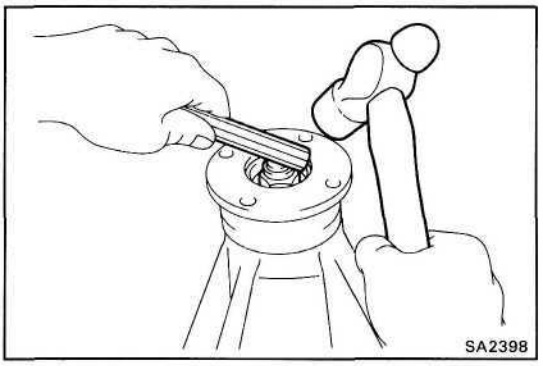

22. STAKE DRIVE PINION NUT

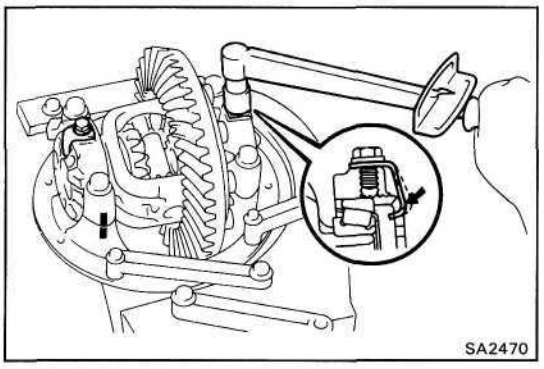

23. (2 PINION AND LSD TYPES)
INSTALL ADJUSTING NUT LOCKS

(a) Install two new lock nuts on the bearing caps.

Torpue: 130 kg-cm (9 ft-lb, 13 N·m)

(b) After tightening the bolts, bend the nut locks.

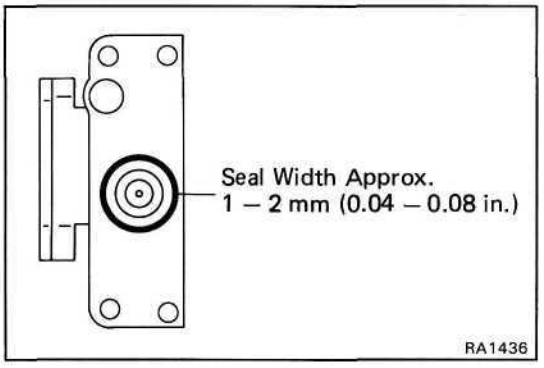

24. (w/ DIFFERENTIAL LOCK)
INSTALL ACTUATOR, SHIFT FORK AND SLEEVE

(a) Clean contacting surfaces of any residual packing material using gasoline or alcohol.

(b) Apply seal packing to the actuator.

Seal packing: Part No. 08826-00090, THREE BOND 1281 or equivalent

HINT: Install the actuator within ten minutes after applying seal packing.

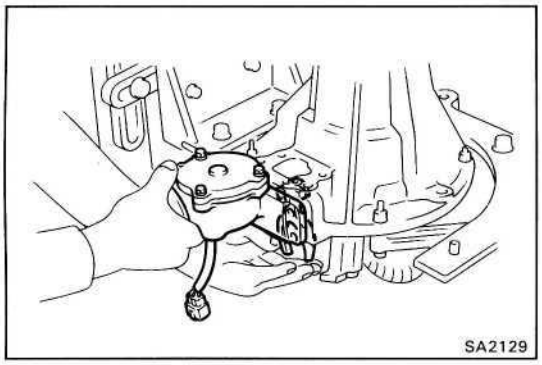

(c) Install the actuator to the differential and match the shaft with the shaft fork hole.

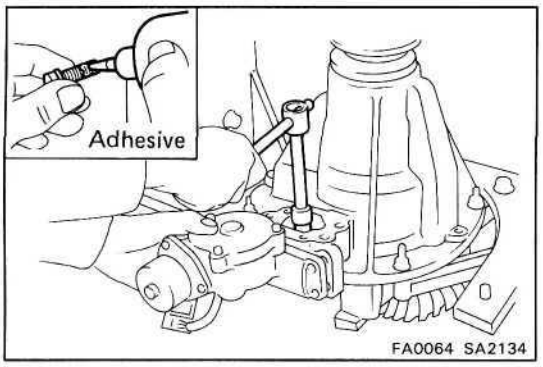

(d) Clean the threads of the set bolt and fork shaft with the white gasoline.

Coat the threads of the set bolt with adhesive.

Adhesive: Part No. 08833-00070. THREE BOND 1324 or equivalent

(e) Tighten the shift fork shaft set bolt.

Torque: 200 kg-cm (14 ft-lb, 20 N-m)

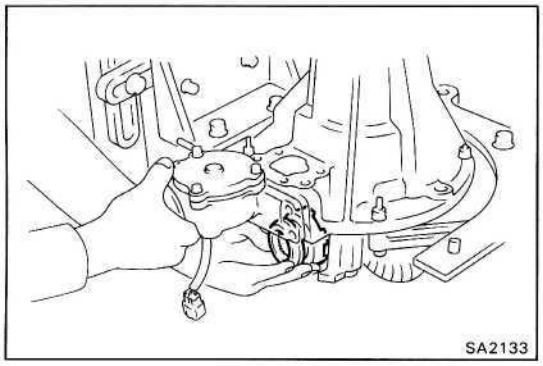

(f) Engage the sleeve with the dog clutch of the differential case.

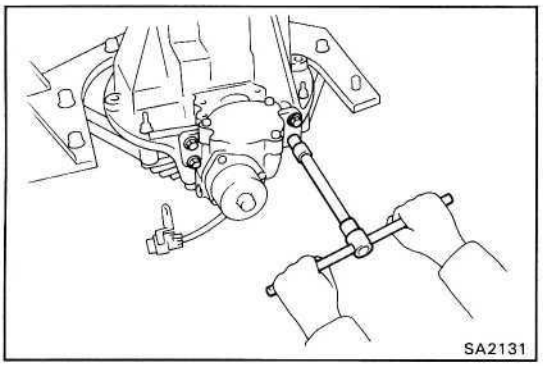

(g) Tighten the four bolts.

Torque: 240 kg-cm (17 ft-lb, 24 N-m)

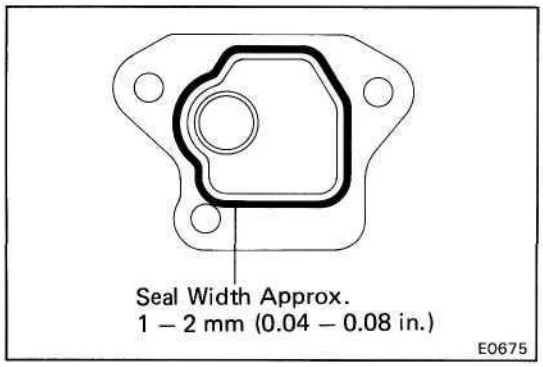

25. (w/ DIFFERENTIAL LOCK)
INSTALL COVER

(a) Clean contacting surfaces of any residual packing material using gasoline or alcohol.

(b) Apply seal packing to the cover.

Seal packing: Part No. 08826-00090, THREE BOND 1281 or equivalent

HINT: Install the cover within ten minutes after applying seal packing.

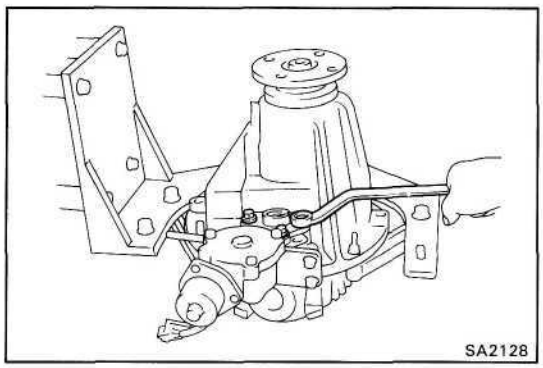

(c) Tighten the three bolts.

Torque: 185 kg-cm (13 ft-lb, 18 N·m)

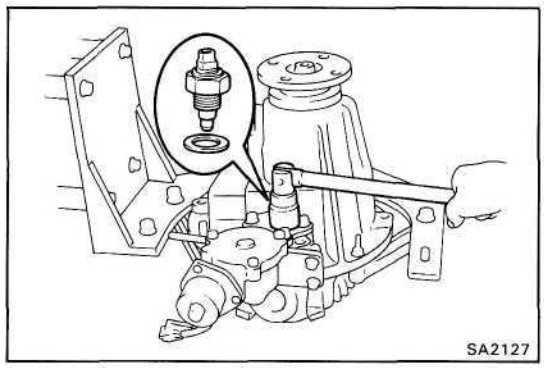

26. (w/ DIFFERENTIAL LOCK)

INSTALL INDICATOR SWITCH

Install the indicator switch with a new gasket.

Torque: 410 kg-cm (30 ft-lb, 40 N·m)

Differential Case (2 Pinion Type)

COMPONENTS

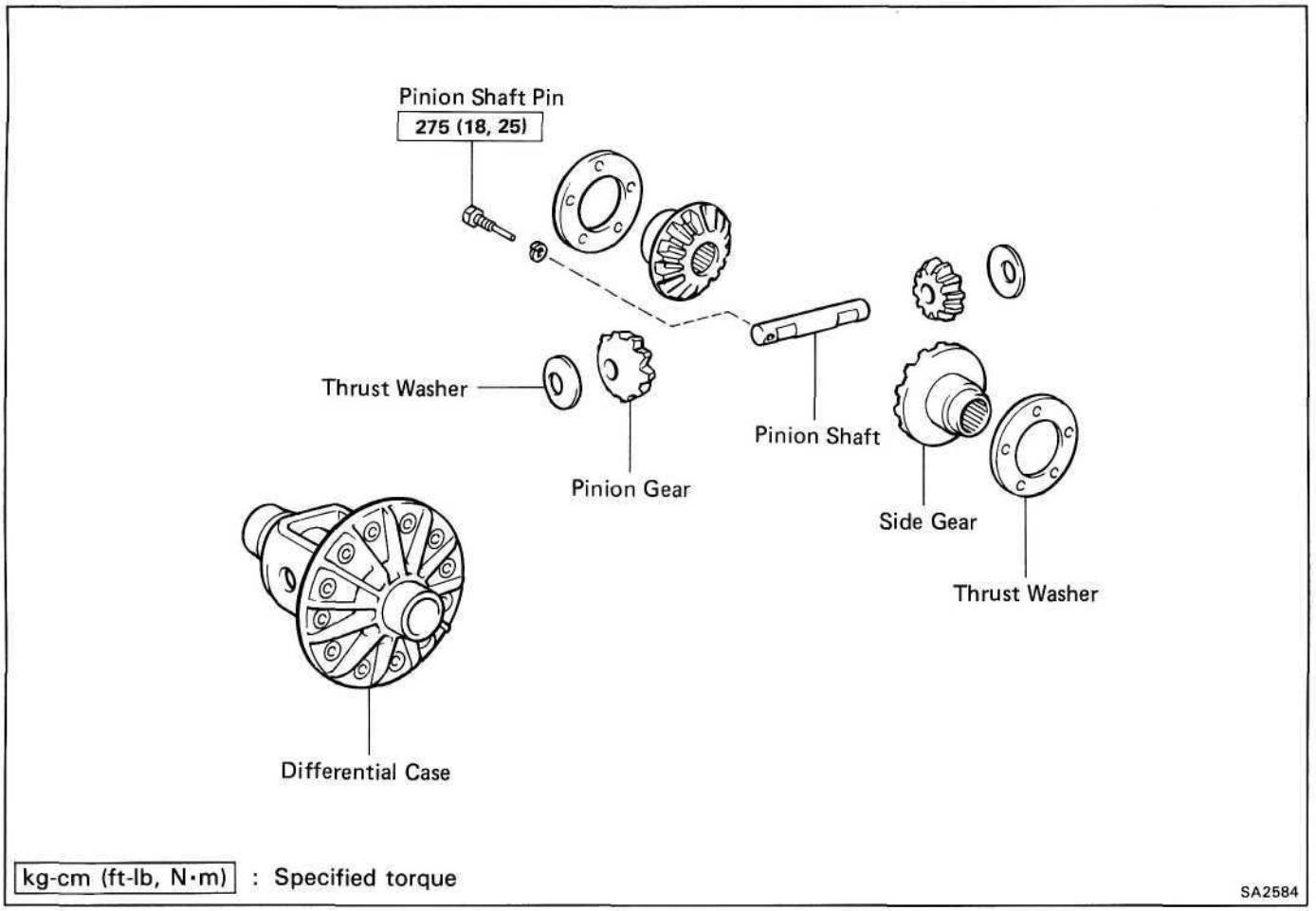

REMOVAL OF DIFFERENTIAL CASE

1. **REMOVE DIFFERENTIAL (See page SA-97)**
2. **REMOVE DIFFERENTIAL CASE FROM CARRIER (See page SA-101)**

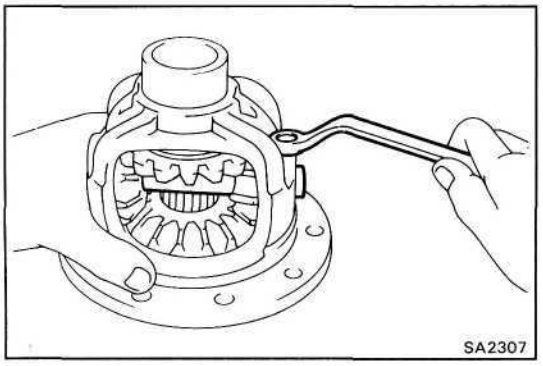

REPLACEMENT OF DIFFERENTIAL CASE COMPONENT PARTS

1. **DISASSEMBLE DIFFERENTIAL CASE**
   (a) Remove the pinion shaft pin.
   (b) Remove the pinion shaft, two pinion gears, two side gears and four thrust washers.

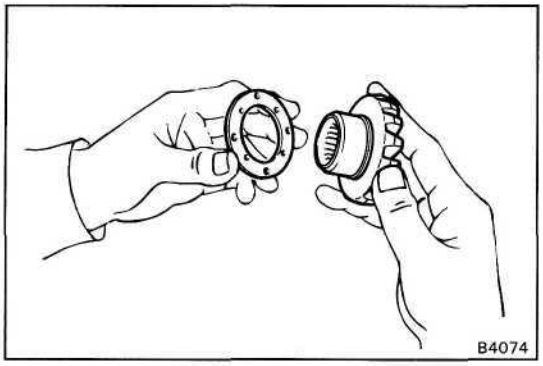

2. ASSEMBLE DIFFERENTIAL CASE

(a) Apply gear oil to each part.

(b) Install the proper thrust washers and side gears.

Using the table below, select thrust washers which will ensure that the backlash is within specification. Try to select washers of the same size for both sides.

Standard backlash: 0.02 — 0.20 mm (0.0008 - 0.0079 in.)

Thrust washer thickness mm(in.)	
1.60 (0.0630)	1.90 (0.0748)
1.75(0.0689)	2.05(0.0807)

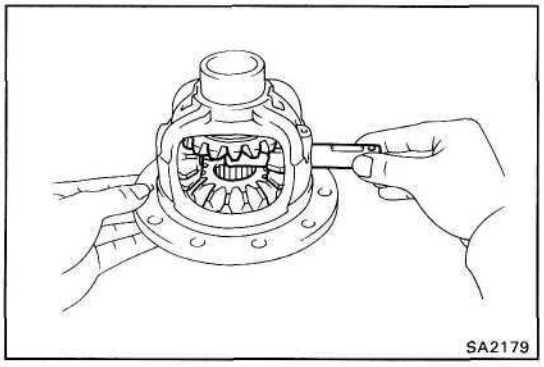

(c) Install thrust washers, side gears, pinion gears and pinion shaft in the differential case.

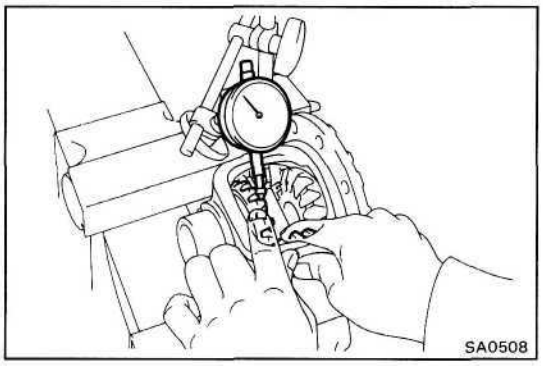

(d) Check the side gear backlash.

Measure the side gear backlash while holding one pinion gear toward the case.

Standard backlash: 0.02 - 0.20 mm (0.008 - 0.0079 in.)

If the backlash is not within specification, install a thrust washer of different thickness.

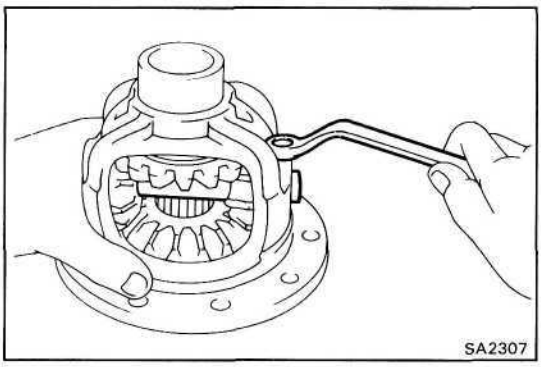

(e) Install the pinion shaft pin.

Torque: 275 kg-cm (18 ft-lb, 25 N·m)

INSTALLATION OF DIFFERENTIAL

1. INSTALL DIFFERENTIAL CASE IN CARRIER
(See page SA-101)

2. INSTALL DIFFERENTIAL
(See page SA-97)

Differential Case (4 Pinion Type)

COMPONENTS

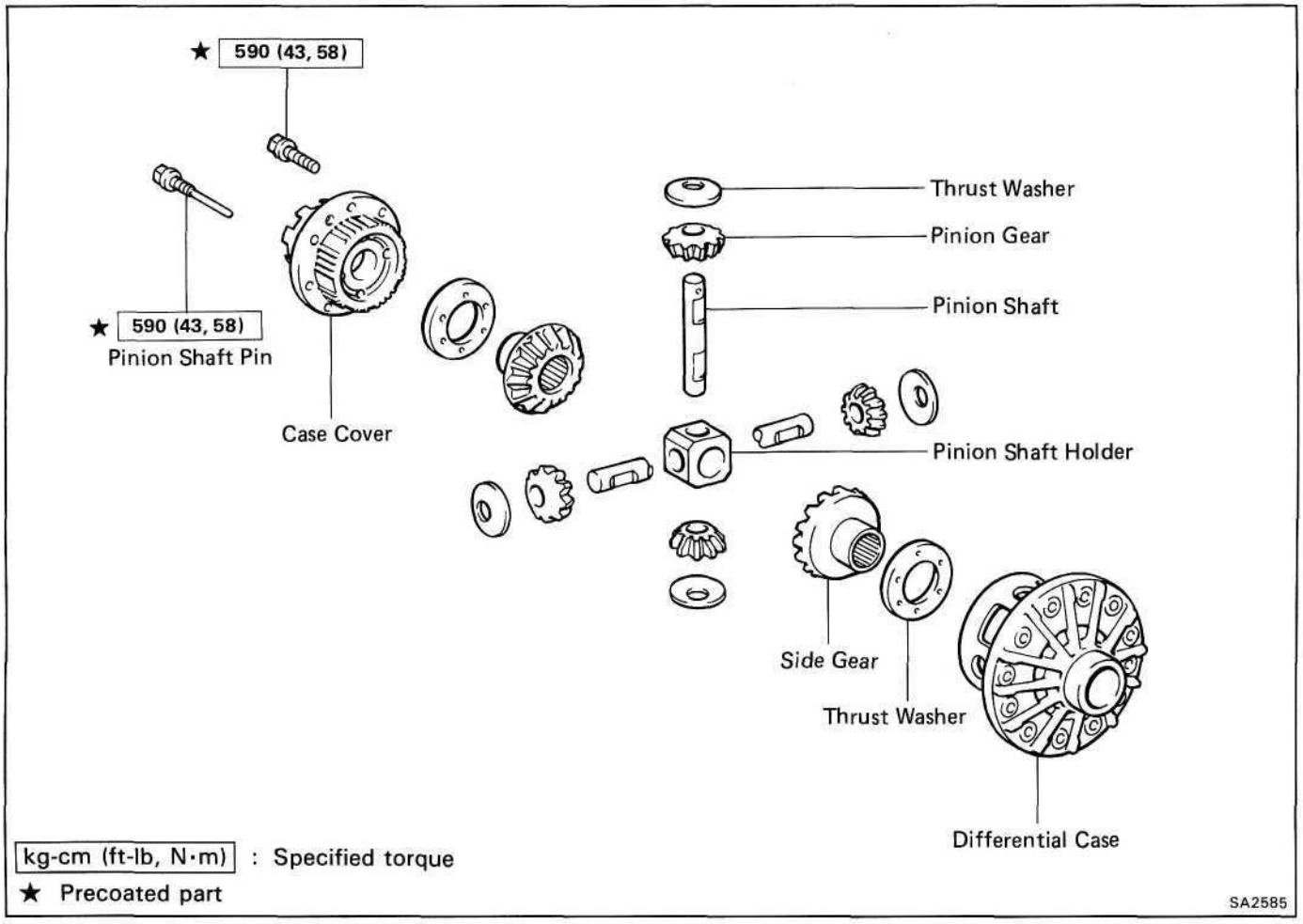

REMOVAL OF DIFFERENTIAL CASE

1. **REMOVE DIFFERENTIAL (See page SA-97)**
2. **REMOVE DIFFERENTIAL CASE FROM CARRIER (See page SA-101)**

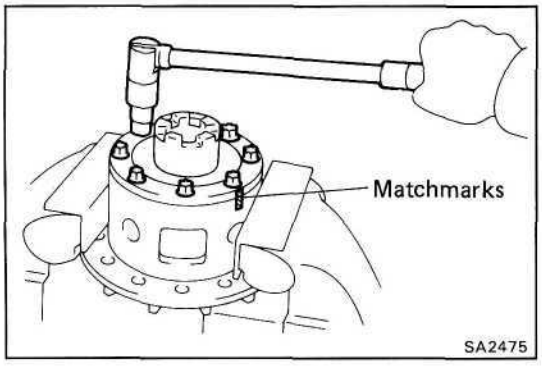

DISASSEMBLY OF DIFFERENTIAL CASE

1. **DISASSEMBLE DIFFERENTIAL CASE**
   (a) Place matchmarks on the case and cover.
   (b) Using a torx socket wrench (09044-00020), remove the five set bolts and three pinion shaft pins.

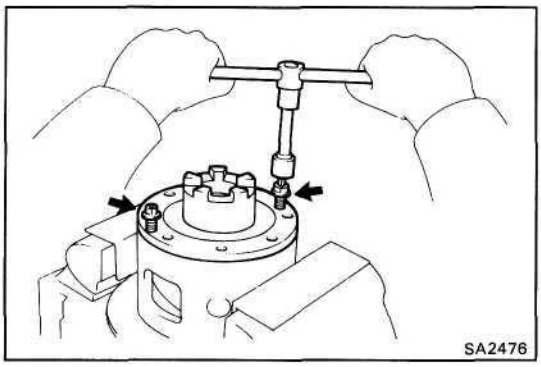

(c) Using two cover installation bolts, separate the cover and case.

(d) Remove the two cover installation bolts.

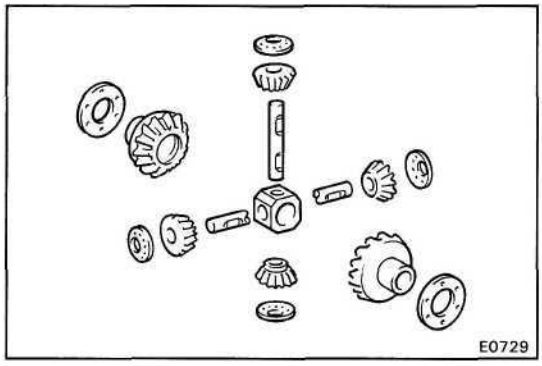

2. REMOVE FOLLOWING PARTS FROM CASE:

- Side gear (2 pieces)
- Side gear thrust washer (2 pieces)
- Pinion gear (4 pieces)
- Pinion thrust washer (4 pieces)
- Pinion shaft (3 pieces)
- Pinion shaft holder

ASSEMBLY OF DIFFERENTIAL CASE

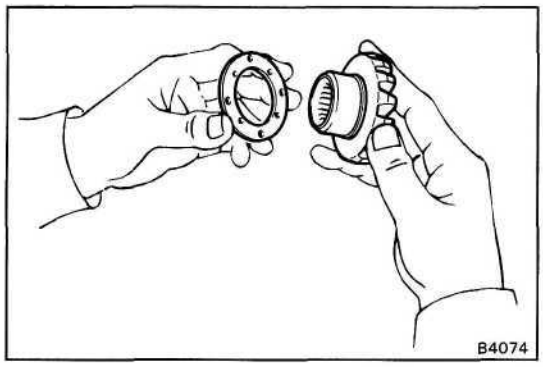

1. MEASURE SIDE GEAR BACKLASH

(a) Apply gear oil to each part.

(b) Install the thrust washer to the side gear.

(c) Install the thrust washer to the pinion.

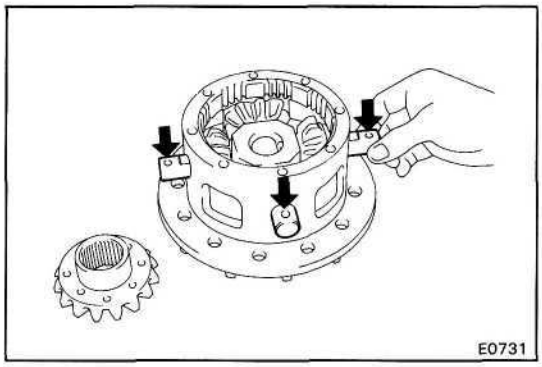

(d) Install the side gear into the case.

(e) Install the holder into the case.

(f) Install the four pinions.

(g) Align the pinion shaft hold and case pinion shaft pin hole, and install the pinion shaft.

(h) Install the side gear to the cover.

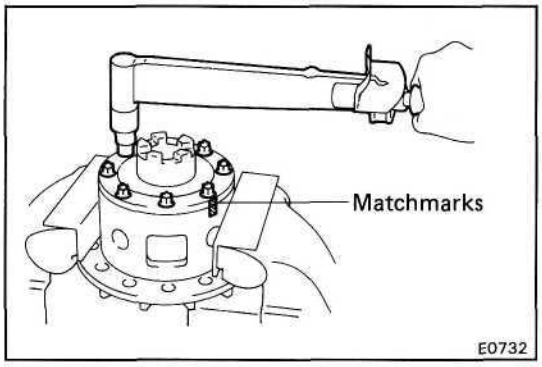

(i) Align the matchmarks, install the case and cover.

(j) Using a torx socket wrench (09044-00020), torque the five bolts and three pinion shaft pins.

Torque: 590 kg-cm (43 ft-fb, 58 N-m)

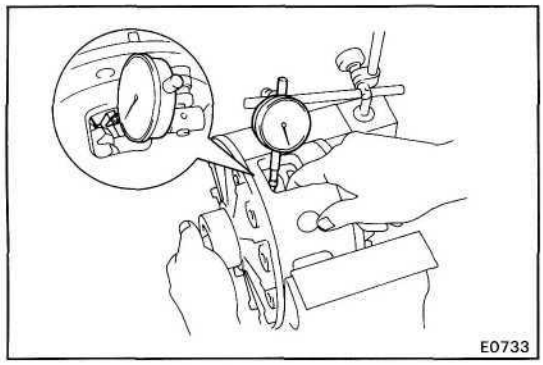

(k) Holding the side gear, measure the backlash.

Backlash: 0.02 - 0.20 mm (0.0008 - 0.0079 in.)

HINT: Measure at all four locations.

If the backlash is not within specification, install the thrust washer of a different thickness.

Thrust washer thickness mm (in.)	
1.60 (0.0630)	1.90 (0.0748)
1.75 (0.0689)	2.05 (0.0807)

(l) After measuring backlash, remove the five set bolts and three pinion shaft pins.

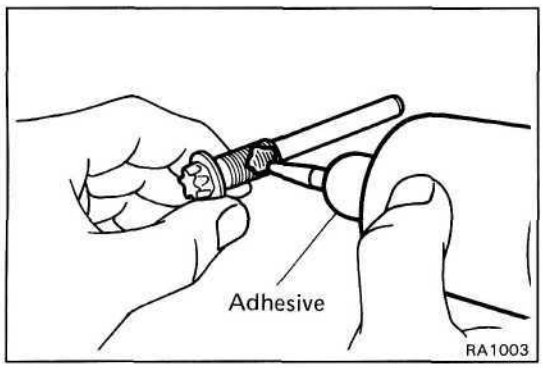

2. ASSEMBLE DIFFERENTIAL CASE

(a) Clean the threads of the bolts, pinion shaft pins, case and cover with the white gasoline.

(b) Coat the threads of the bolts and pinion shaft pins with adhesive.

Adhesive: Part No. 08833-00070, THREE BOND 1324 or equivalent

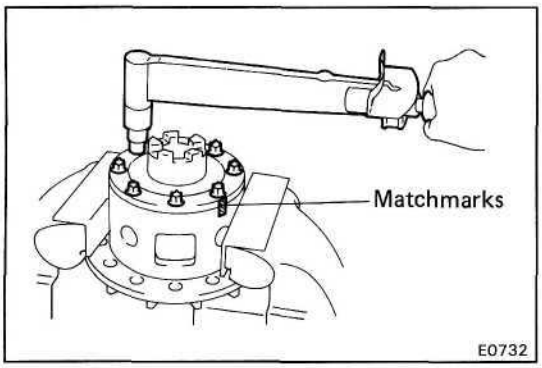

(c) Align the matchmarks, install the case and cover.

(d) Using a torx socket wrench (09044-00020), torque the five bolts and three pinion shaft pins.

Torque: 590 kg-cm (43 ft-lb, 58 N-m)

INSTALLATION OF DIFFERENTIAL

1. INSTALL DIFFERENTIAL CASE IN CARRIER
(See page SA-101)

2. INSTALL DIFFERENTIAL
(See page SA-97)

Differential Case (Limited Slip Differential)

COMPONENTS

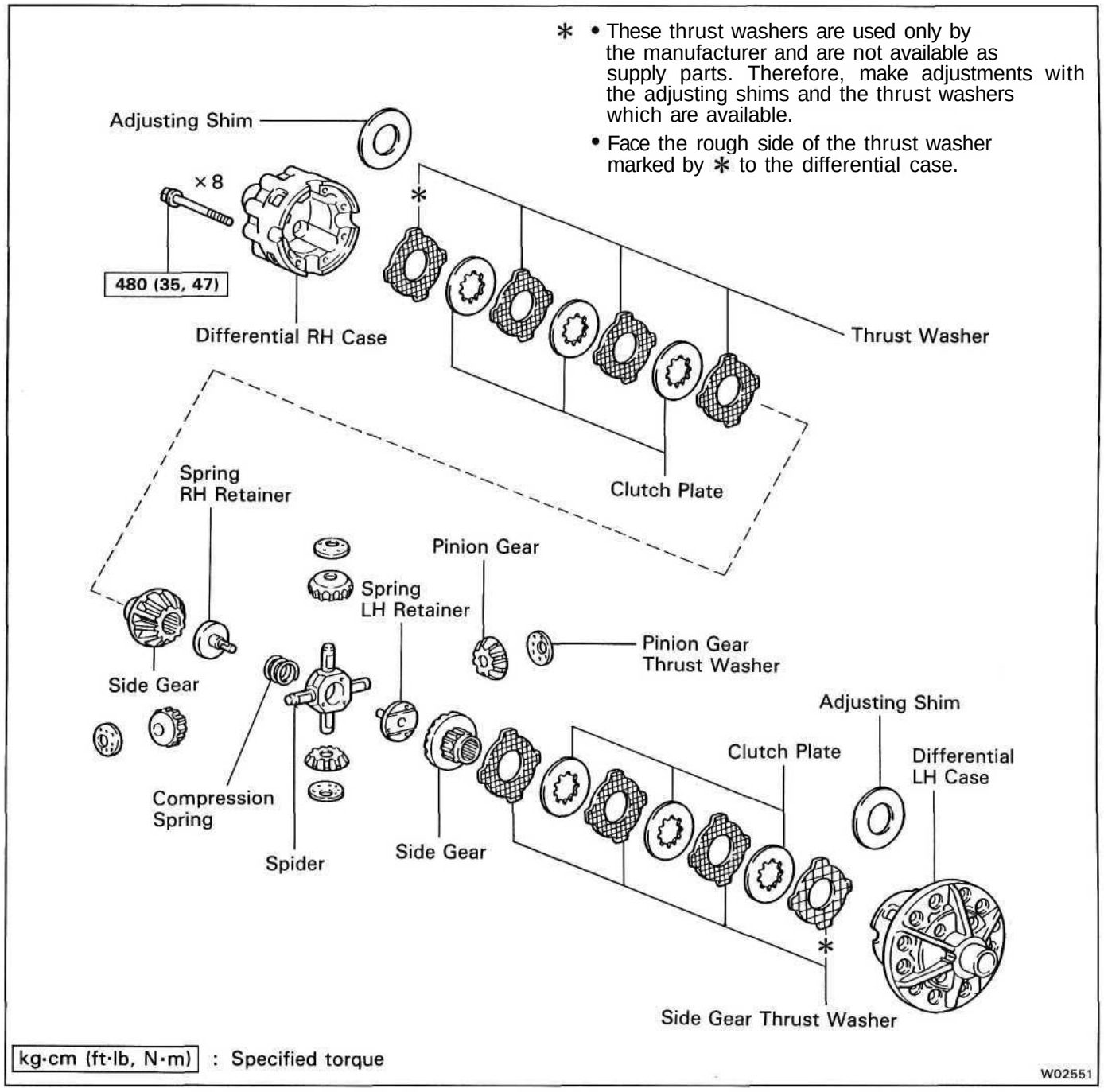

REMOVAL OF DIFFERENTIAL CASE

1. **REMOVE DIFFERENTIAL (See page SA-97)**
2. **REMOVE DIFFERENTIAL CASE FROM CARRIER (See page SA-101)**

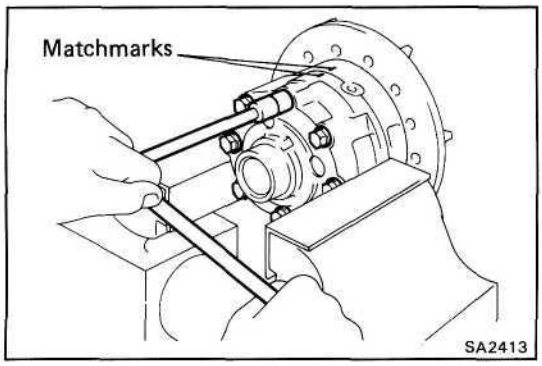

DISASSEMBLY OF DIFFERENTIAL CASE

(See page SA-129)

1. DISASSEMBLE DIFFERENTIAL CASE

(a) Place the matchmarks on the LH and RH cases.

(b) Remove the eight bolts uniformly, a little at a time.

(c) Using a plastic hammer, separate the LH and RH cases.

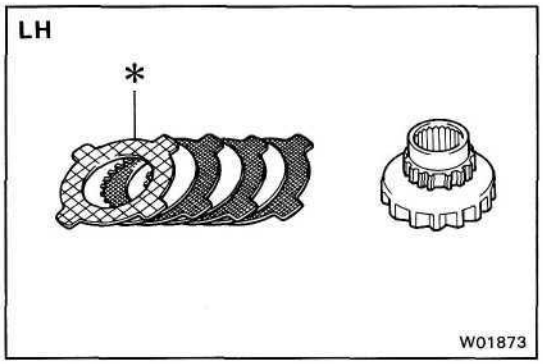

2. REMOVE FOLLOWING PARTS FROM CASE:

HINT: Keep the disassembled parts in order.

(a) Remove the following parts from the LH case:

HINT: Face the rough side of the thrust washer marked by ''*'' to the differential case.

(1) Side gear

(2) Side gear thrust washer (4 pieces)

(3) Clutch plate (3 pieces)

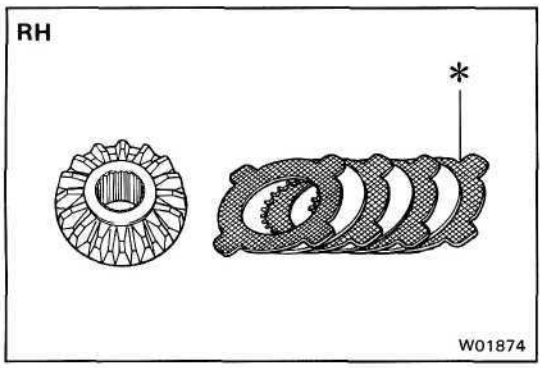

(b) Remove the following parts from the RH case:

HINT: Face the rough side of the thrust washer marked by ''*'' to the differential case.

(1) Spring LH retainer and two springs

(2) Spider with pinion gear

(3) Spring RH retainer

(4) Side gear

(5) Side gear thrust washer (4 pieces)

(6) Clutch plate (3 pieces)

INSPECTION OF COMPONENTS

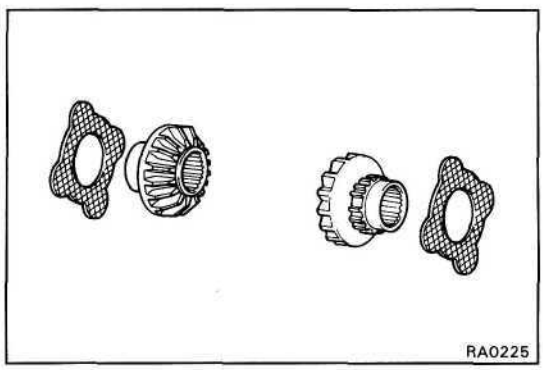

1. REPLACE PARTS THAT ARE DAMAGED OR WORN

HINT: If replacing the side gear, also replace the thrust washer contacting it.

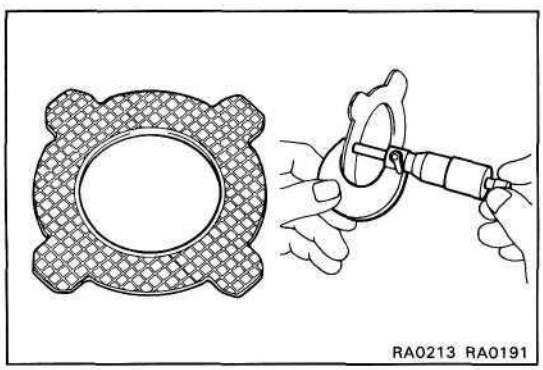

2. INSPECT THRUST WASHERS FOR WEAR OR DAMAGE

Check that the contact surface of the thrust washer is even and that no bare metal is showing.

(For reference) Thickness limit:
1.97 - 2.05 mm (0.0776 - 0.0807 in.)

If necessary, replace the thrust washers.

HINT: If replacing the thrust washer, also replace the clutch plate contacting it.

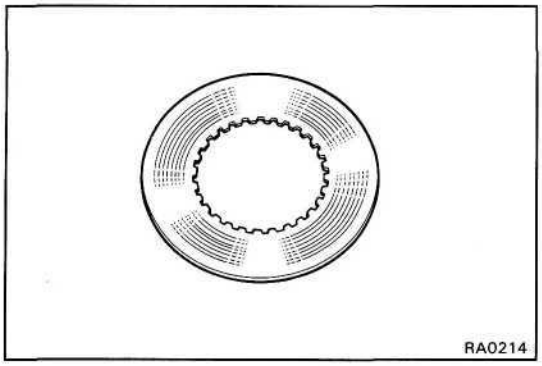

3. INSPECT CLUTCH PLATE FOR WEAR OR DAMAGE

Check that there is no abnormal wear.

(For reference) Thickness:

1.97 - 2.03 mm (0.0776 - 0.0799 in.)

If necessary, replace the clutch plate.

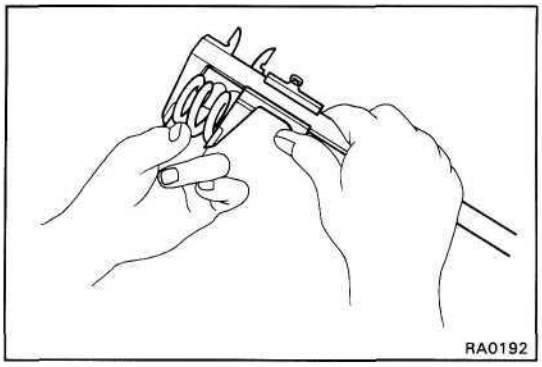

4. INSPECT SPRING FREE LENGTH

Measure the free lenght of the spring.

(For reference) Length:

38.0 - 39.3 mm (1.49 - 1.55 in.)

ASSEMBLY OF DIFFERENTIAL CASE

(See page SA-129)

HINT:

- Using a rag, clean off any foreign matter from the parts.
- Apply LSD oil to the contact surfaces of the clutch plates and the thrust washers.
- When installing, the thrust washers (Marking A — M) are not used. To adjust the backlash, use one new thrust washer or the adjusting shim.

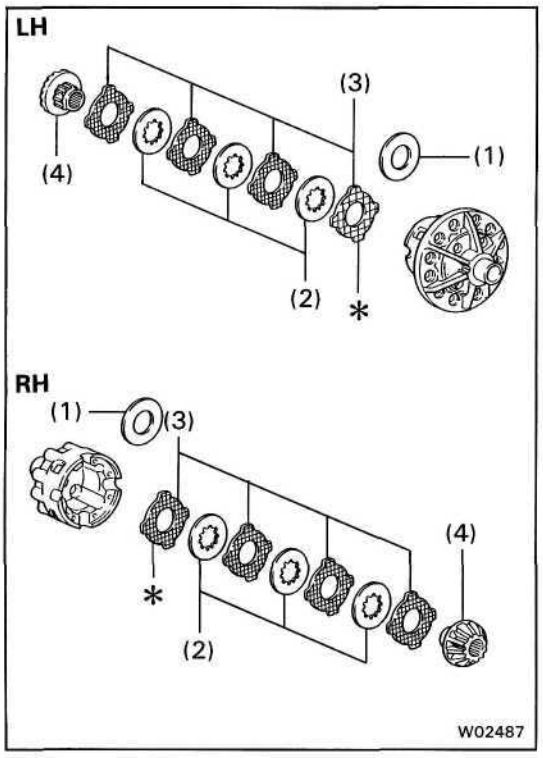

1. MEASURE SIDE GEAR BACKLASH

(a) Install the following parts to the LH and RH cases:

HINT: Face the rough side of the thrust washer marked by "*" to the differential case.

(1) Adjusting shim (0 to 3 pieces)

(2) Clutch plate (3 pieces)

(3) Side gear thrust washer (4 pieces)

(4) Side gear

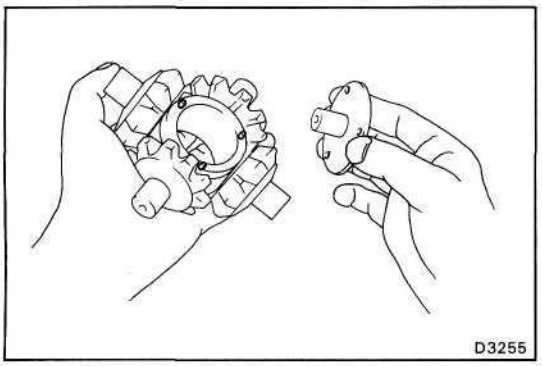

(b) Install the four pinion gears and thrust washers to the spider.

(c) Align the LH retainer holes with the spider knock pins and install the LH retainer.

(d) Install the pinion gear and spider to the LH case.

HINT: Install the spider to the LH case tightely, and don't move the spring retainer.

(e) Hold the side gear and spider, measure the side gear backlash.

Backlash: 0.02 - 0.24 mm (0.0008 - 0.0094 in.)

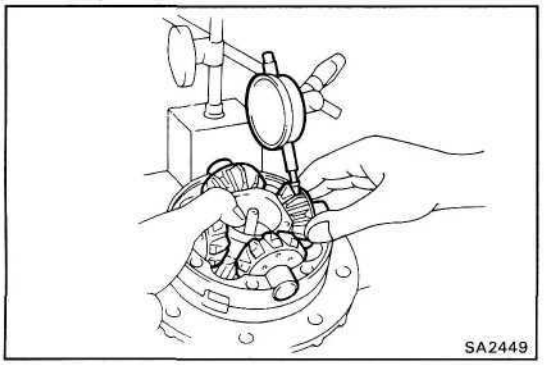

HINT:
- Measure at all four locations.
- Measure the backlash at the LH case and at the RH case.

If the backlash is not within specification, install a thrust washer of a different thickness.

Thickness mm (in.)	
0.20(0.0079)	0.30(0.0118)
0.25(0.0098)	0.35(0.0138)

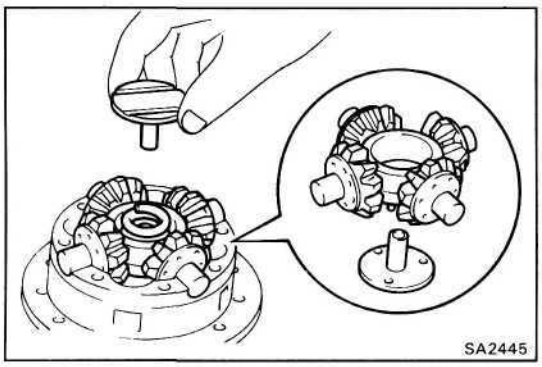

2. ASSEMBLE DIFFERENTIAL CASE

(a) Reinstall the spider and spring LH retainer to the LH case.

HINT: Install the spider to the LH case tightly, and don't move the spring retainer.

(b) Install the compression spring and spring RH retainer.

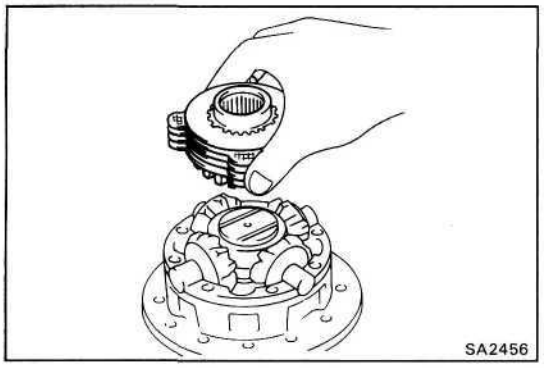

(c) Install the side gear, thrust washers and clutch plates.

(d) Align the matchmarks and assemble the RH and LH cases.

HINT: Be careful not to drop the side gear, and check the pinion and side gear alignment.

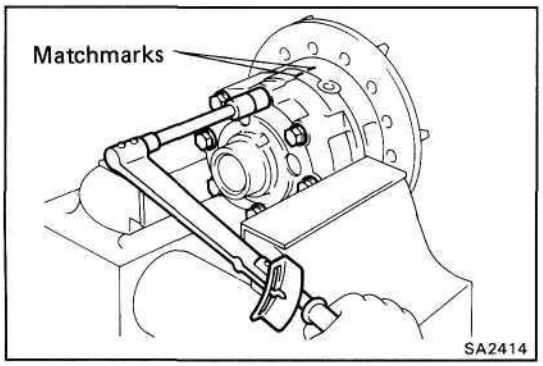

(e) Tighten the eight bolts uniformly, a little at a time.

Torque: 480 kg-cm (35 ft-lb, 47 N·m)

INSTALLATION OF DIFFERENTIAL

1. INSTALL DIFFERENTIAL CASE IN CARRIER
(See page SA-101)

2. INSTALL DIFFERENTIAL
(See page SA-97)

DIFFERENTIAL LOCKING SYSTEM

Description

- The differential locking system slides the differential lock sleeve which is meshed to the axle shaft, and by meshing with the differential case, restricts the operation of the differential.
- In the vehicles, an electrical motor is used to slide the differential lock sleeve. Driving of the motor is accomplished by the ECU (Electronic Control Unit) in accordance with signals from the differential lock control switch on the instrument panel and from various other switches and sensors. This motor is built into the differential lock actuator.

Parts Location and System Diagram

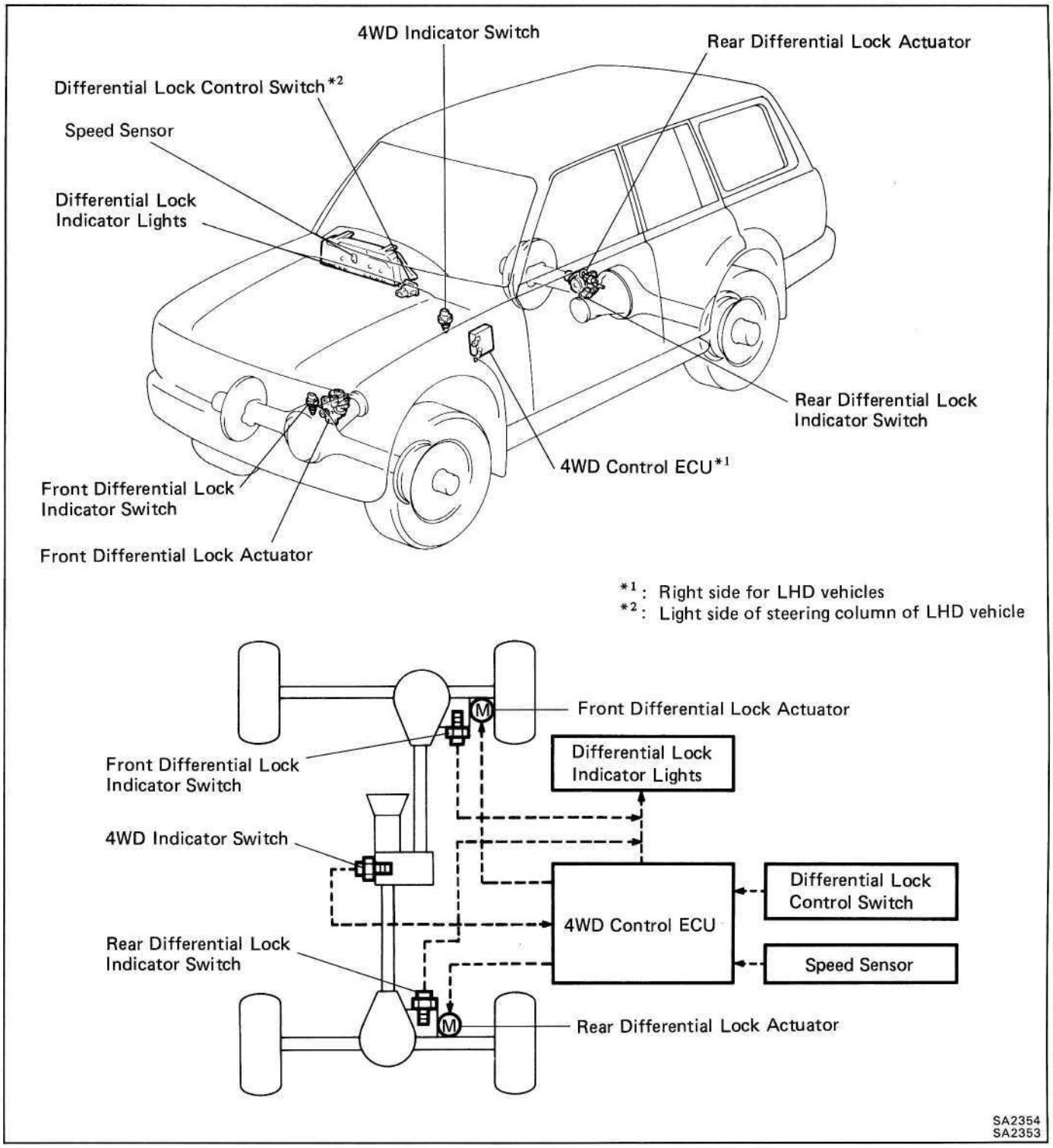

Wiring and Connector Diagrams

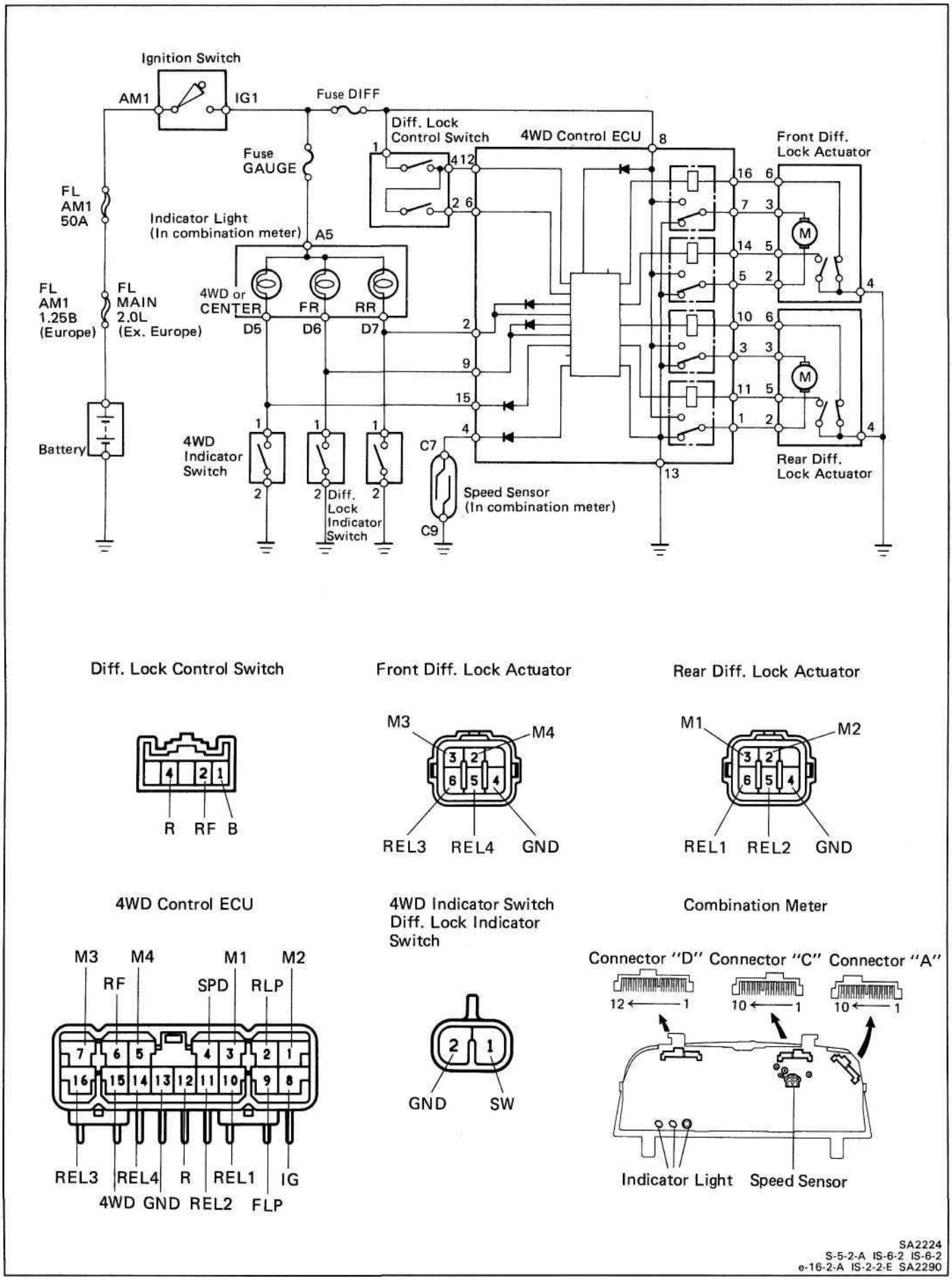

Troubleshooting

NOTICE:

- **Check that 4WD mode (Part-Time Models) or center differential lock mode (Full-Time Models) is set.**
- **When switching differential Free ↔ Lock, the indicator lamp will blink if the gears of the differential lock sleeve are not meshed. If this occurs, when the tires are rotated to apply differential power to the differential, the differential locks and the indicator lamp light up.**

Problem	Possible cause	Remedy	Page
Indicator lights do not light up.	Fusible link blown	Replace fusible link	
	GAUGE fuse blown	Replace fuse and check for short	
	Bulb burned out	Replace bulb	
	Wiring or ground faulty	Repair as necessary	
Indicator lights do not light up.(Diff. lock control switch RR or FR·RR position)	DIFF fuse blown	Replace fuse and check for short	
	Diff. lock switch control switch	Check switch	SA-144
	4WD control ECU faulty	Check ECU	SA-136, 138
	Wiring or ground faulty	Repair as necessary	
Differential lock does not operate.	Diff. lock indicator switch faulty	Check switch	SA-144
	Diff. lock actuator faulty	Check actuator	SA-138
	4WD control ECU faulty	Check ECU	SA-136, 138
	Differential carrier (Diff. lock) faulty	Repair as necessary	SA-41, 101
	Wiring or ground faulty	Repair as necessary	
After differential lock, lock not released when vehicle speed is higher than approx. 8 km/h (5 mph).	Speed sensor faulty	Check sensor	BE-55
	4WD control ECU faulty	Check ECU	SA-136, 138
	Wiring or ground faulty	Repair as necessary	

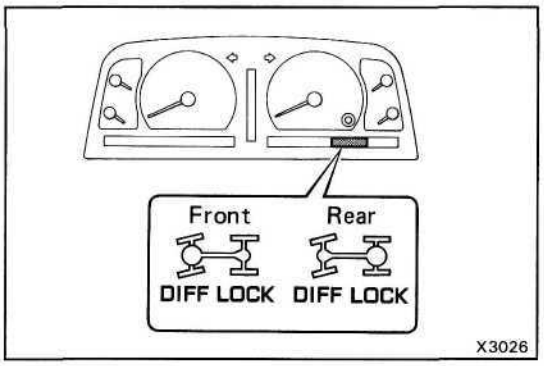

System Inspection

1. INSPECT INDICATOR LIGHTS

Check that the indicator lights (front side and rear side) light up for approx. one second when the ignition switch is turned ON.

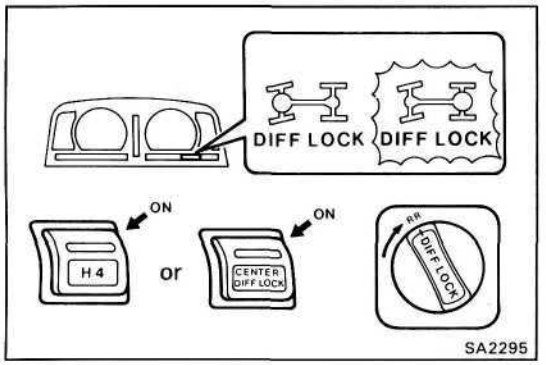

2. INSPECT DIFFERENTIAL LOCK OPERATION

HINT: Put the shift lever on neutral.

(a) Jack up the vehicle then start the engine.

(b) Put on the 4WD switch (Part-Time Models) or the center differential lock (Full-Time Models).

(c) When the diff. lock control switch is set to RR position, the indicator light (rear side) is turned on. Differential lock is applied to the rear wheel at this time.

HINT: If the gears of the differential lock system are not meshed, the indicator light remains blinking, so rotate the tires to mesh the gears.

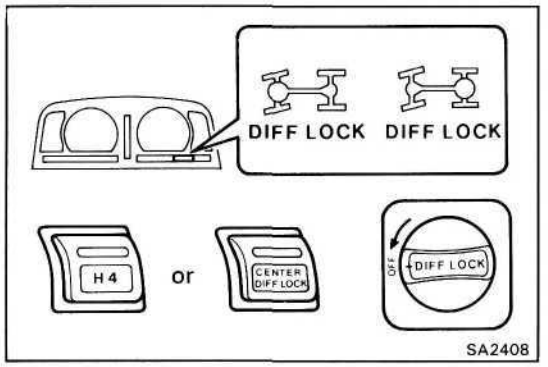

(d) When the diff. lock control switch is at OFF position, the indicator light goes off. Differential lock is released for the rear wheel at this time.

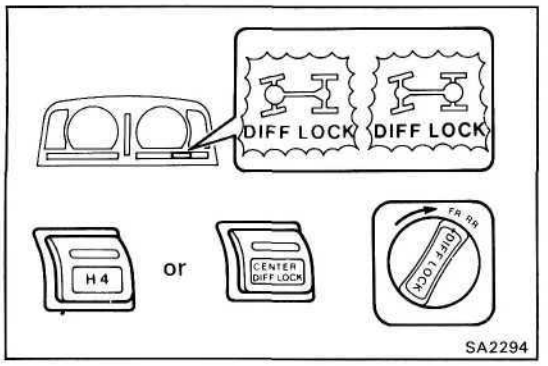

(e) When the diff. lock control switch is set to FR-RR position, the indicator lights (front side and rear side) are turned on. Differential lock is applied to both the front wheels and rear wheels at this time.

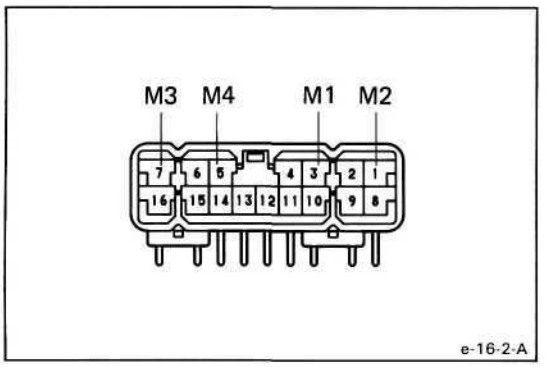

(f) Check the voltage between the terminals of the 4WD control ECU when switching the diff. lock control switch with the speedometer, registering approx. 8 km/h (5 mph) or more.

Diff. lock control switch	Terminal	Specified value
OFF → RR	3 (M1) — 1 (M2)	0.5 V or less (on change)
RR → FR·RR	7 (M3) — 5 (M4)	0.5 V or less (on change)

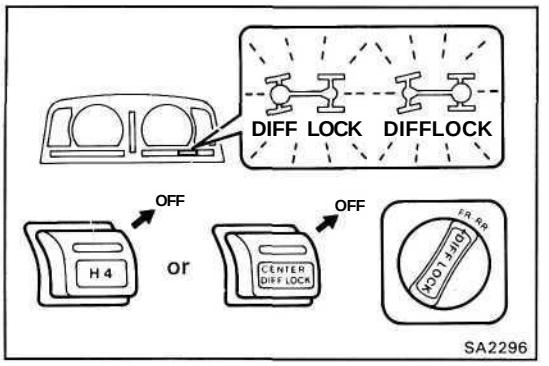

(g) Check that the indicator lights blink when 2WD mode (Part-Time Models) or center diff. lock release mode (Full-Time Models)is set. Differential lock is released for both the front wheels and rear wheels at this time.

(h) Return the diff. lock control switch to OFF.

(i) Stop the engine and jack down the vehicle.

Wire Harness **Side**

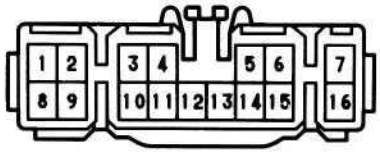

e-16-1-A

Differential Locking System Circuit

INSPECTION OF SYSTEM CIRCUIT

1. INSPECT SYSTEM CIRCUIT WITH CONNECTOR DISCONNECTED

Disconnect the connector from the 4WD control ECU and inspect the connector on the wire harness side as shown in the chart.

Trouble Part	Tester Connection	Check item	Condition		Specified Value
Rear Differential Lock Actuator	1 — 3 (M2) (M1)	Resistance	—		Less than 100 Ω
Front Differential Lock Actuator	5 — 7 (M4) (M3)	Resistance	—		Less than 100 Ω
Body Ground	13 — Body (GND) ground	Continuity	—		Continuity
Speed Sensor	4 — Body (SPD) ground	Continuity	Vehicle moving slowly		1 pulse each 40 cm (15.75 in.)
DIFF Fuse	8 — Body (IG) ground	Voltage	Ignition switch ON		Battery voltage
Rear Differential Lock Indicator Switch	2 — Body (RLP) ground	Voltage	Ignition switch ON	Indicator light (Rear) ON	About 0 V
				Indicator light (Rear) OFF	Battery voltage
Front Differential Lock Indicator Switch	9 — Body (FLP) ground	Voltage	Ignition switch ON	Indicator light (Front) ON	About 0 V
				Indicator light (Front) OFF	Battery voltage
4WD Indicator Switch	15 — Body (4WD) ground	Voltage	Ignition switch ON	Indicator light (4WD or Center diff. lock) ON	About 0 V
				Indicator light (4WD or Center diff. lock) OFF	Battery voltage
Differential Lock Control Switch	12 — Body (R) ground	Voltage	Ignition switch ON	Diff. lock control switch RR or FR-RR	Battery voltage
				Diff. lock control switch OFF	About 0 V
	6 — Body (RF) ground	Voltage	Ignition switch ON	Diff. lock control switch FR-RR	Battery voltage
				Diff. lock control switch OFF or RR	About 0 V

HINT: When a signal enters the ECU to LOCK the front differential and set the rear differential to FREE (when battery voltage is inputted to terminal 6 (RF) of ECU and about OV is inputted to terminal 12 (R)), or a signal to FREE both the front and rear differentials, the indicator lights keep blinking until the ignition switch is turned off. (Fail-safe function)

If the circuit is not as specified, check and repair or replace the trouble part shown in the table above.

2. INSPECT BATTERY OF VOLTAGE

Battery voltage: 10 — 14.5V

3. INSPECT SYSTEM CIRCUIT WITH CONNECTOR CONNECTED

(a) Turn the ignition switch to ON position.

(b) Keep the 4WD condition (Part-Time Models) or center differential lock condition (Full-Time Models).

(c) Remove the 4WD control ECU.

(d) Using voltmeter, measure the voltage when the differential lock control switch is in the positions as shown below.

ECU Side

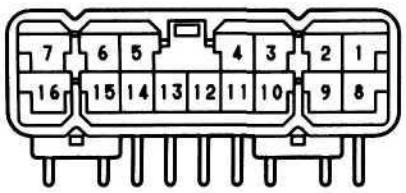

e-16-2-A

Tester connection ⊕ — ⊖	Switch position	Specified valve
15 (4WD) — 13 (GND)	—	0.5 V or less
9 (FLP) — 13 (GND)	FR-RR	
2 (RLP) — 13 (GND)	RR or FR-RR	
3 (M1) — 1 (M2)	OFF → RR	0.5 V or less ↓ 10 — 14.5 V (Approx. 1 sec) ↓ 0.5 V or less
1 (M2) — 3 (M1)	RR → OFF	
7 (M3) — 5 (M4)	OFF or RR → FR-RR	
5 (M4) — 7 (M3)	FR-RR → RR or OFF	

If the circuit is not as specified, replace the ECU.

(e) Install the ECU in place.

Differential Lock Actuator

INSPECTION OF ACTUATOR

INSPECT RELAY OPERATION

(a) Jack up the vehicle.

(b) Use the heater main relay and connect it as shown below.

(c) Rotate the tire and check that differential lock has occurred.

If opereation is not as specified, replace the actuator.

Heater Main Relay

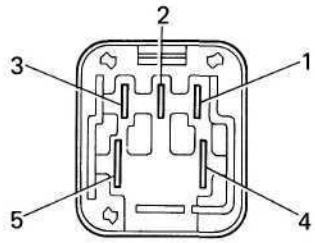

BE1013

Free → Lock

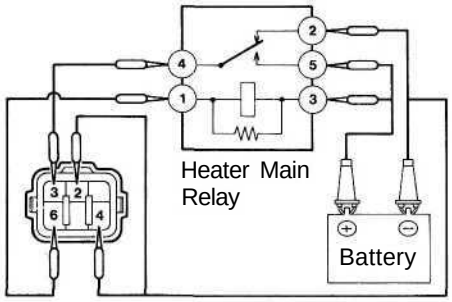

K7972

Lock → Free

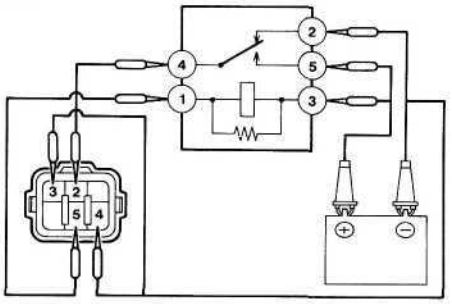

K7973

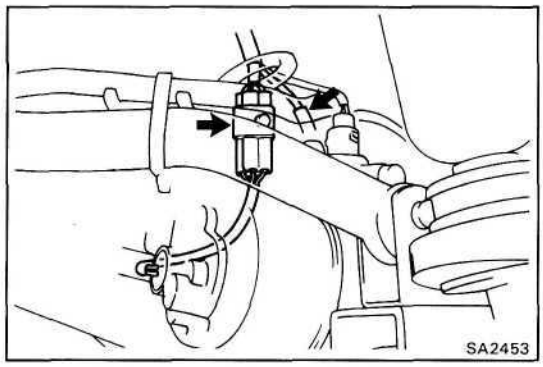

REMOVAL AND INSTALLATION OF FRONT ACTUATOR

1. SHIFTING FRONT DIFFERENTIAL LOCK
(See step 1 on page SA-38)

2. REMOVE ACTUATOR

(a) Disconnect the connector and tube.

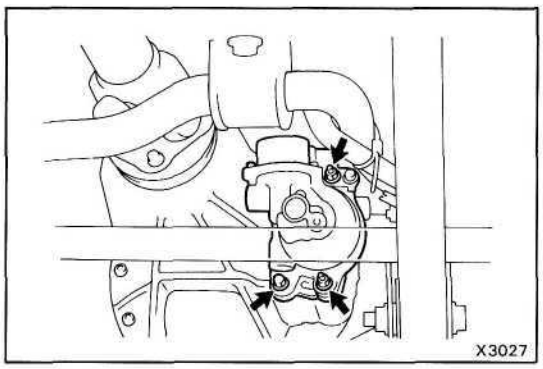

(b) Remove the two nuts, bolt and actuator.

(c) Remove the O-ring from the actuator.

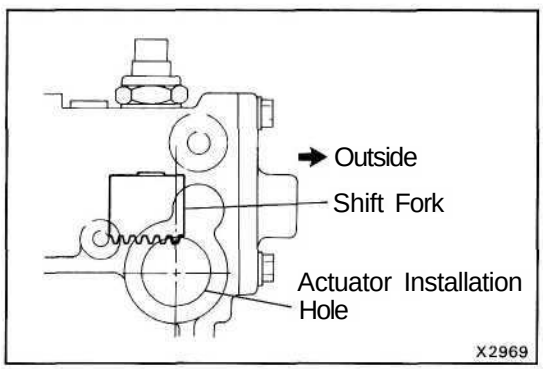

3. INSTALL ACTUATOR

(a) Check that the outermost rack tooth of the shift fork is virtually above the center line of the actuator installation hole.

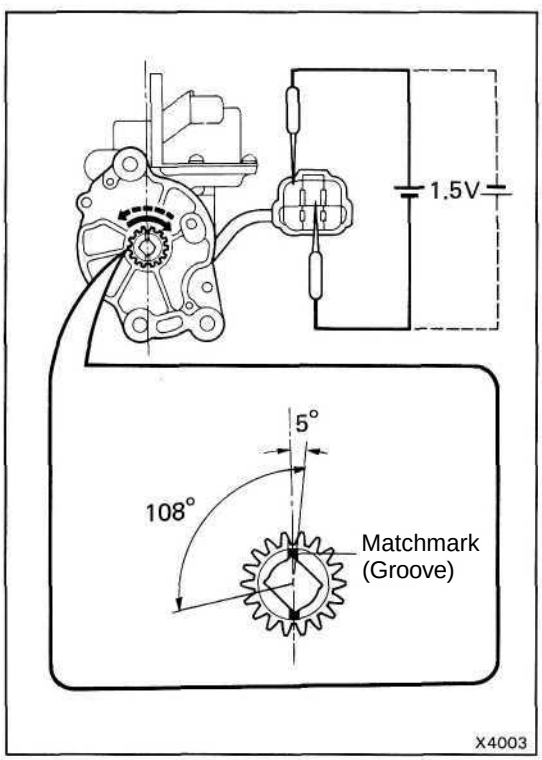

(b) Using a dry cell battery, align the matchmark on the actuator pinion with the center line of the actuator.

NOTICE:

- **If the pinion of the actuator is not in the-specified place, the actuator is difficult to be installed.**
- **Don't supply the battery voltage between terminals.**
- **If the matchmark comes to the extention limit of the rotation, don't electrify moreover.**

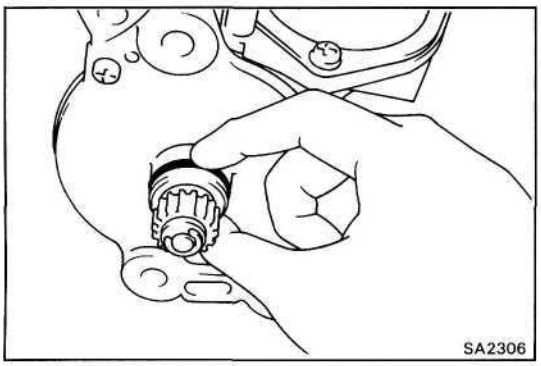

(c) Install a new O-ring to the acutuator.

(d) Apply a light coat of gear oil on the O-ring.

(e) Apply MP grease to the gear part of the actuator.

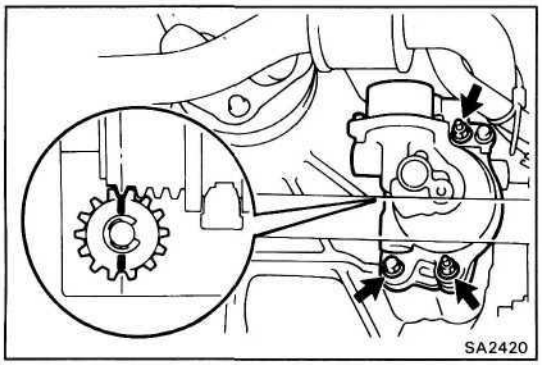

(f) Install the actuator to the differential with two nuts and bolt, so that the outermost rack tooth of the shift fork shall fit matchmark of the pinion of the actuator.

HINT: Don't damage the O-ring of the actuator.

Torque: 270 kg-cm (20 ft-lb, 26 N·m)

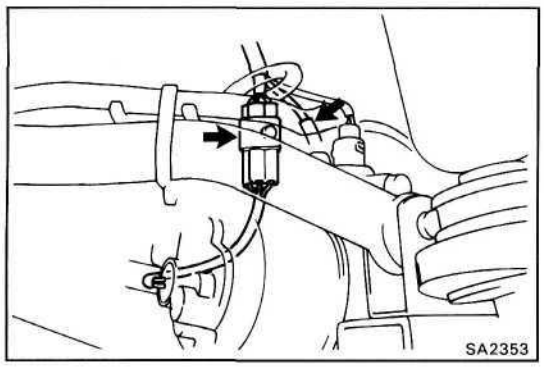

(g) Connect the connector and tube.

HINT:

- The depth of the insertion of the bleeder tube into the hose is approx. 1 5 mm (0.59 in.).
- Take care that water or the equivalent shall not adhere to the connector and hose.

4. CANCEL FRONT DIFFERENTIAL LOCK

With the ignition switch ON, turn the differential lock control switch to OFF to cancel the differential lock.

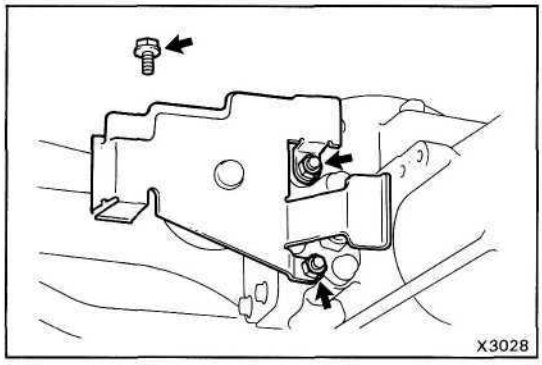

REMOVAL AND INSTALLATION OF REAR ACTUATOR

1. SHIFTING REAR DIFFERENTIAL LOCK
(See step 1 on page SA-97)

2. REMOVE ACTUATOR PROTECTOR

Remove the two nuts, bolt and protector.

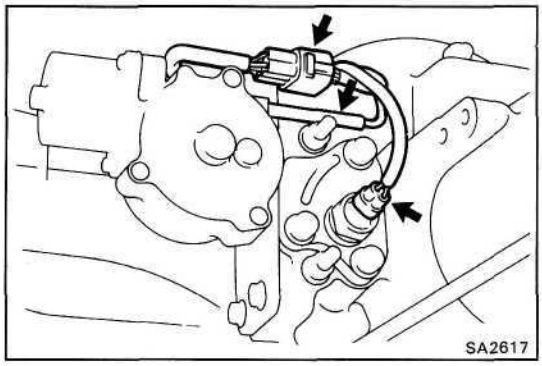

3. DISCONNECT CONNECTORS AND TUBE

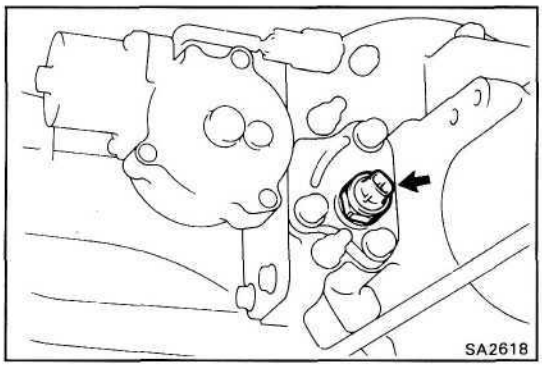

4. REMOVE INDICATOR SWITCH

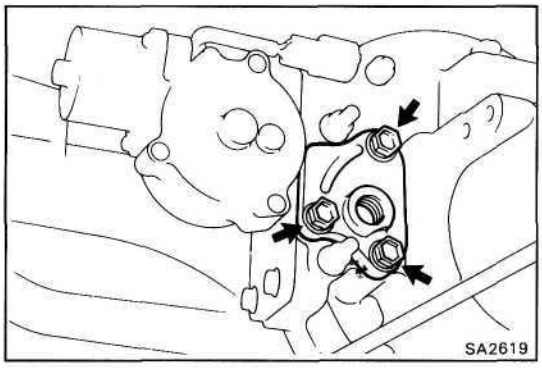

5. REMOVE COVER

(a) Remove the three bolts.
(b) Using a brass bar and hammer, remove the cover.

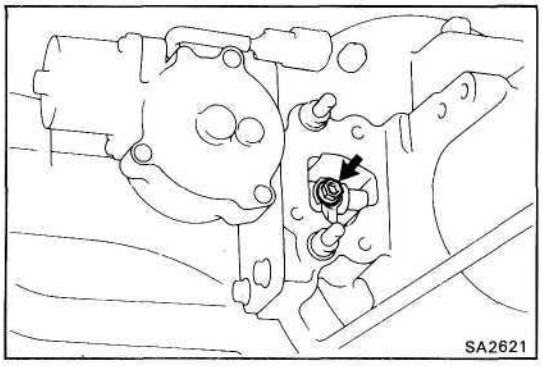

6. REMOVE ACTUATOR

(a) Remove the shift fork shaft bolt.

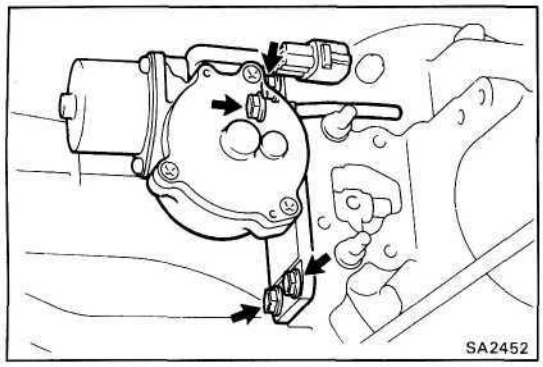

(b) Remove the four bolts.

(c) Using a screwdriver, pry out the actuator.

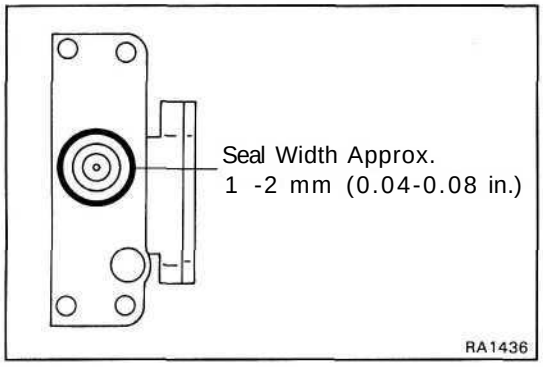

7. INSTALL ACTUATOR

(a) Clean contacting surfaces of any residual packing material using gasoline or alcohol.

(b) Apply seal packing to the actuator.

Seal packing: Part No. 08826-00090, THREE BOND 1281 or equivalent

HINT: Install the actuator within ten minutes after applying seal packing.

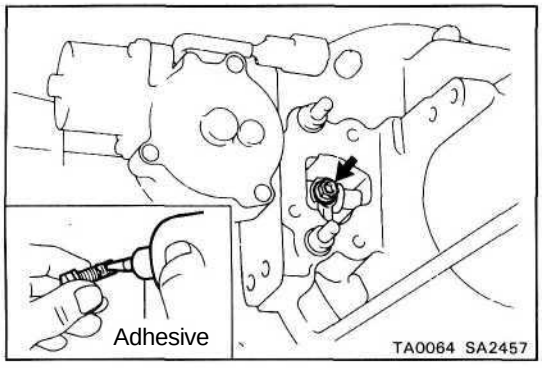

(c) Install the actuator to the differential and match the shaft with the shaft fork hole.

(d) Clean the threads of the set bolt and fork shaft with the white gasoline.

(e) Coat the threads of the set bolt with adhesive.

Adhesive: Part No. 08833-00070, THREE BOND 1324 or equivalent

(f) Tighten the shift fork shaft set bolt.

Torque: 200 kg-cm (14 ft-lb, 20 N·m)

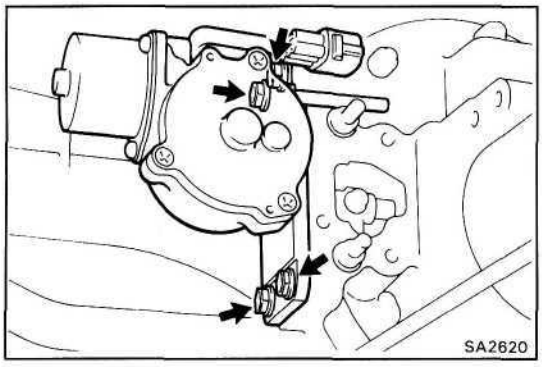

(g) Tighten the four bolts uniformly, a little at a time.

Torque: 240 kg-cm (17 ft-lb, 24 N·m)

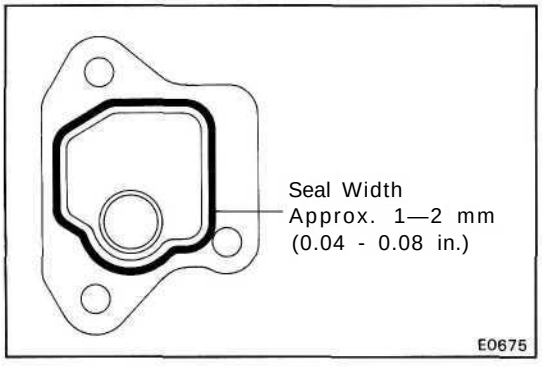

8. INSTALL COVER

(a) Clean contacting surfaces of any residual packing material using gasoline or alcohol.

(b) Apply seal packing to the cover.

Seal packing: Part No. 08826-00090, THREE BOND 1281 or equivalent

HINT: Install the cover ten minutes after applying seal packing.

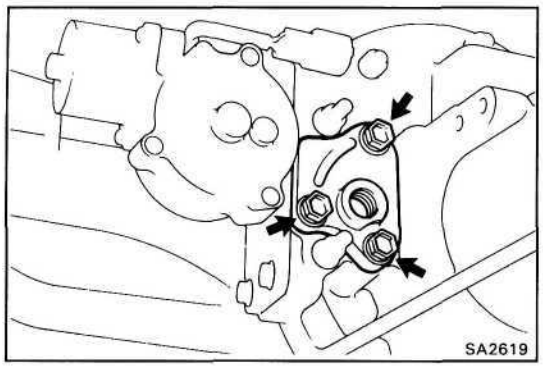

(c) Tighten the three bolts.

Torque: 185 kg-cm (13 ft-lb, 18 N-m)

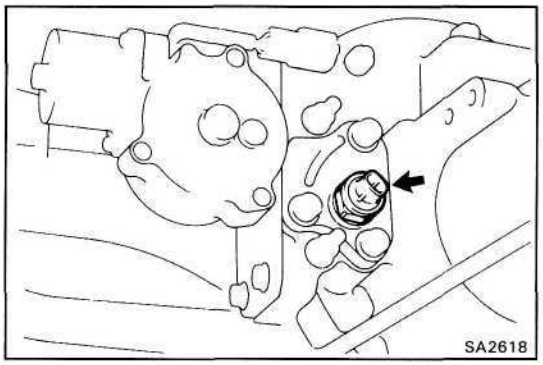

9. INSTALL INDICATOR SWITCH

Install the indicator switch with a new gasket.

Torque: 410 kg-cm (30 ft-lb, 40 N-m)

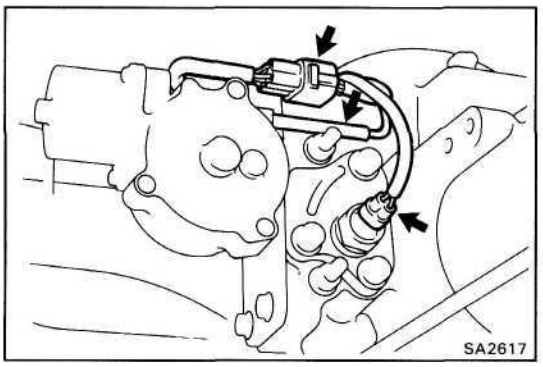

10. CONNECT CONNECTORS AND TUBE

HINT:

- The depth of the insertion of the bleeder tube into the hose is approx. 15 mm (0.59 in.)
- Take care the water or the equivalent shall not adhere to the connectors and hose.

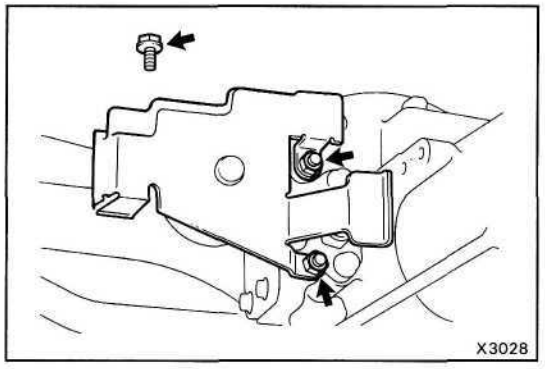

11. INSTALL ACTUATOR PROTECTOR

Install the protector with the two nuts and bolt.

Torque: Nut 360 kg-cm **(26 ft-lb, 35 N-m)**
Bolt 200 kg-cm **(14 ft-lb, 20** N-m)

12. CANCEL REAR DIFFERENTIAL LOCK

With the ignition switch ON, turn the differential lock control switch to OFF to cancel the differential lock.

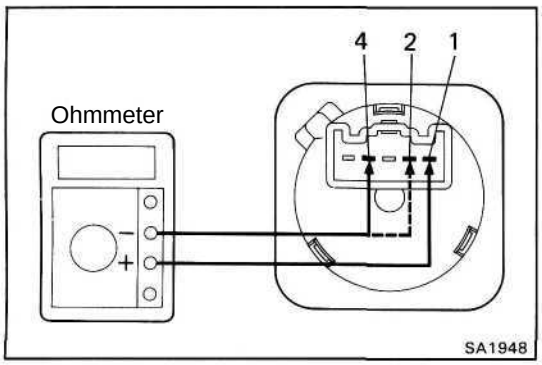

Differential Lock Control Switch

INSPECTION OF DIFFERENTIAL LOCK CONTROL SWITCH

INSPECT SWITCH CONTINUITY

Inspect switch continuity between terminals as shown.

Terminal / Switch position	1 (B)	2 (RF)	4 (R)
OFF			
RR	○		○
FR-RR	○	○	○

If continuity is not as specified, replace the switch.

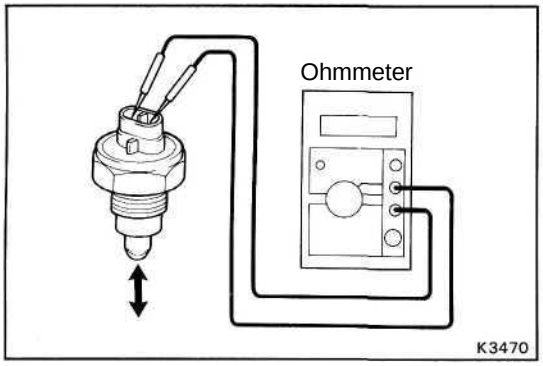

Indicator Switch

INSPECTION OF INDICATOR SWITCH

1. **INSPECT DIFFERENTIAL LOCK INDICATOR SWITCH (FRONT AND REAR)**
   (a) Check that there is continuity between terminals when the switch is pushed (differential connected position).
   (b) Check that there is no continuity when the switch is free (differential disconnected position).

   If operation is not as specified, replace the switch.

2. **INSPECT 4WD INDICATOR SWITCH**
   (See page TF-11)

Combination Meter

INSPECTION OF SPEED SENSOR AND INDICATOR LIGHT

1. **INSPECT SPEED SENSOR**
   (See page BE-55)

2. **INSPECT INDICATOR LIGHT**

REAR SUSPENSION

COMPONENTS

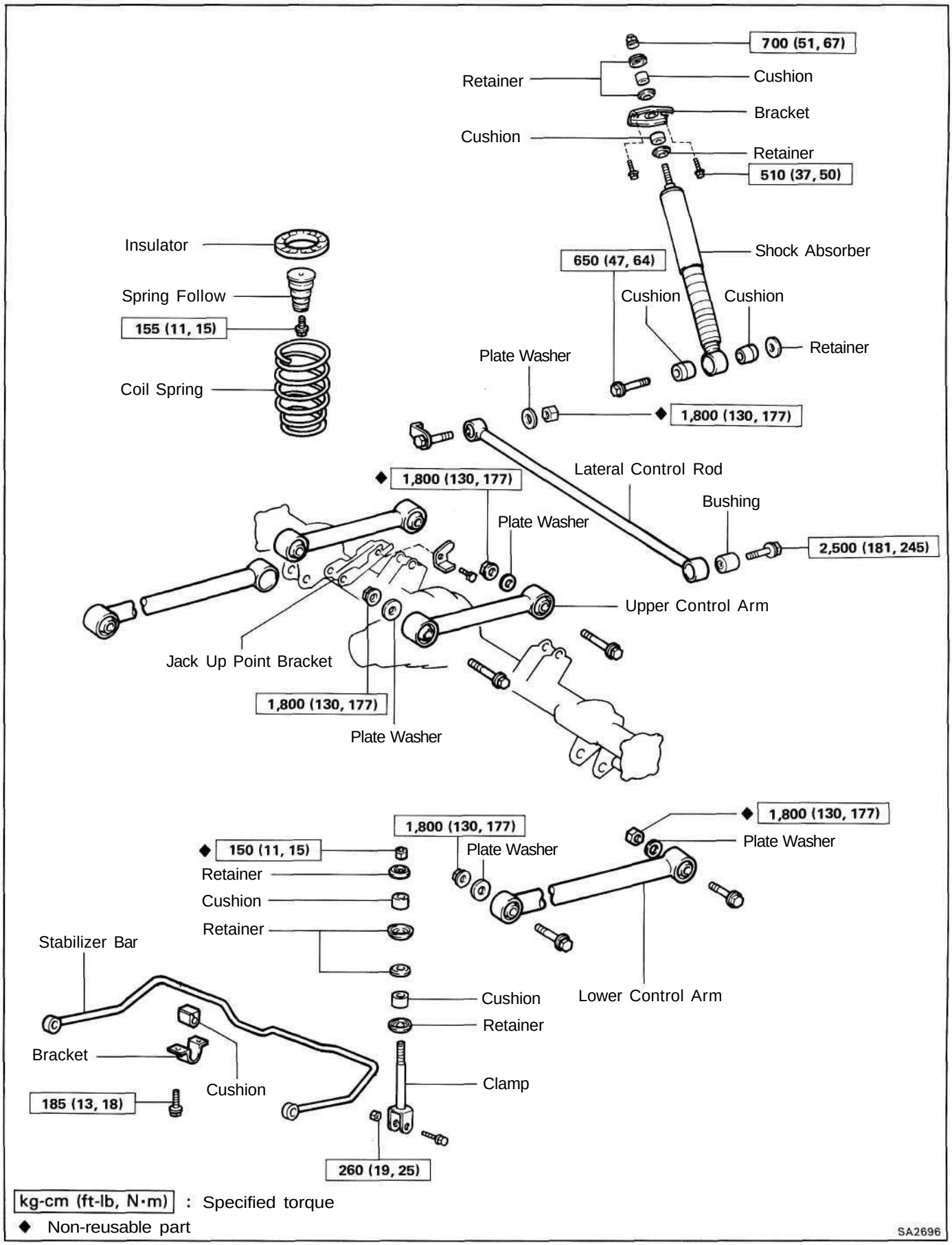

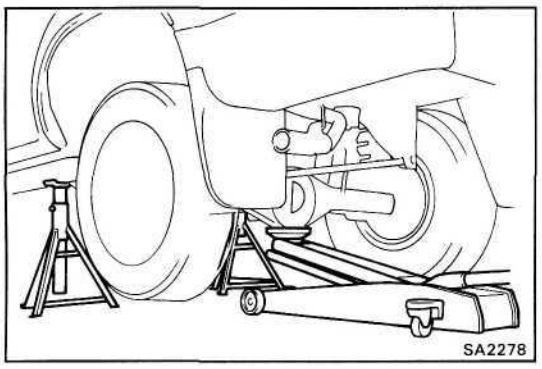

Coil Spring and Shock Absorber

(See page SA-145)

REMOVAL OF COIL SPRING AND REAR SHOCK ABSORBER

1. JACK UP AND SUPPORT VEHICLE

Jack up the rear axle housing and support the frame with stands. Hold the rear axle housing with a jack.

2. REMOVE WHEEL

3. DISCONNECT REAR SHOCK ABSORBER

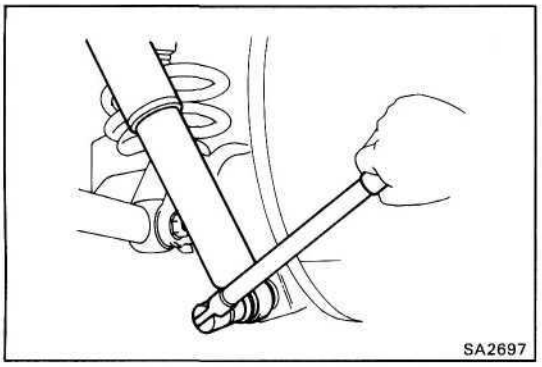

(a) Remove the bolt holding the shock absorber to the rear axle housing and disconnect the shock absorber.

(b) Remove the two cushions.

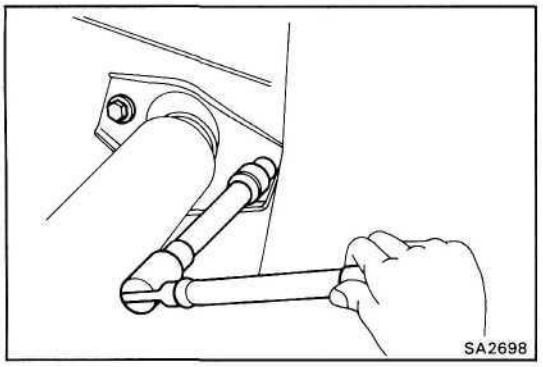

(c) If replacing the shock absorber, remove the nut holding the shock absorber to the frame, and remove the shock absorber.

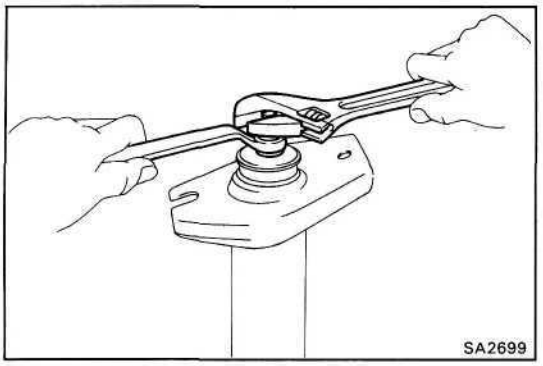

(d) Hold the piston rod, and remove the nut.

(e) Remove the retainers, cushions and bracket.

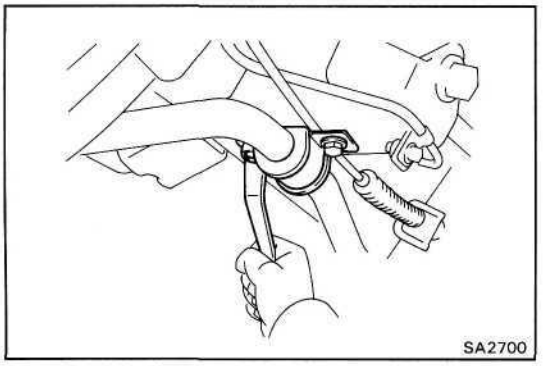

4. DISCONNECT STABILIZER BAR BRACKETS

Remove the two bolts holding the stabilizer bar bracket from the rear axle housing.

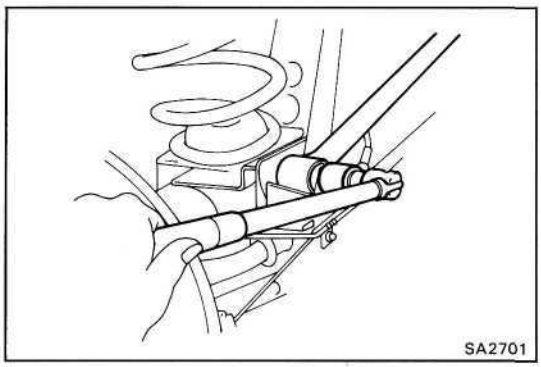

5. **DISCONNECT LATERAL CONTROL ROD**

(a) Remove the bolt and disconnect the lateral control rod from axle housing.

(b) Remove the bushing.

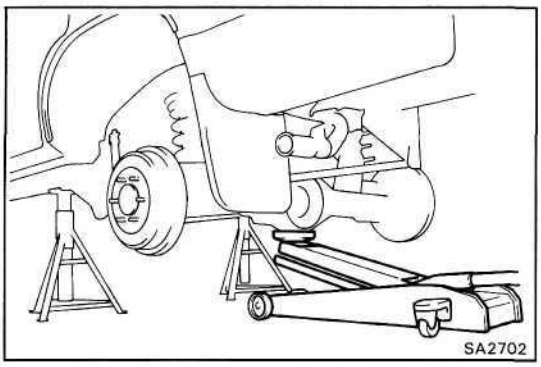

6. **REMOVE COIL SPRING**

(a) Begin to lower the rear axle housing.

HINT: Be careful not to snap the brake line and parking brake cable.

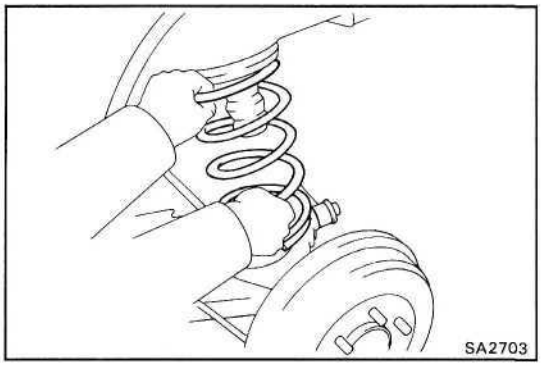

(b) While lowering the rear axle housing, remove the coil spring and upper insulator.

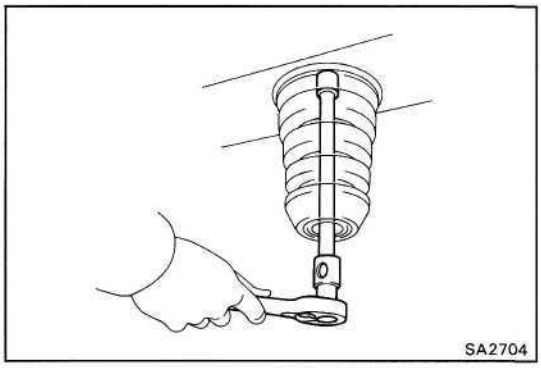

(c) Remove the bolt and the spring follow from the frame.

INSPECTION OF REAR SHOCK ABSORBER

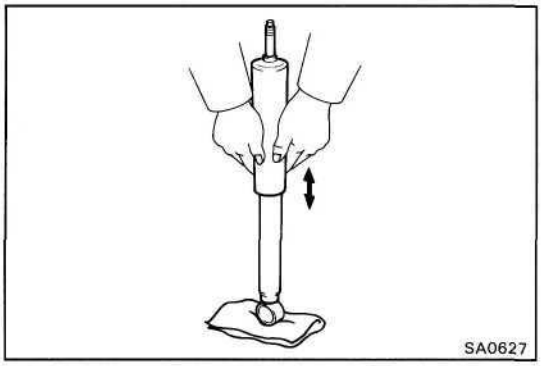

1. **INSPECT OPERATION OF SHOCK ABSORBER**

(a) While pushing the shock absorber, check that the pull throughout the stroke is even, and there is no abnormal resistance or noise.

(b) Push the shock absorber in fully and release it. Check that it returns at a constant speed throughout.

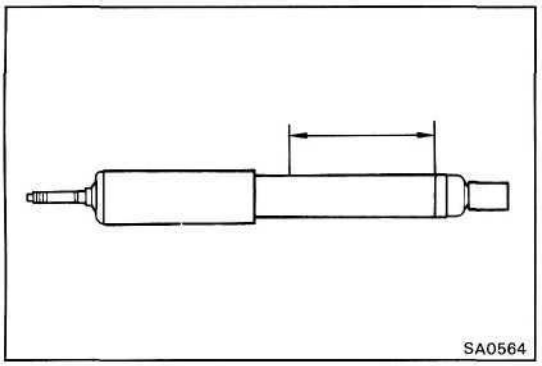

2. DISCARD SHOCK ABSORBER

Before discarding the shock absorber, drill a hole 2 — 3 mm (0.079 — 0.118 in.) in diameter at the location shown in the illustration to release the gas inside.

NOTICE:
- **When drilling, chips may fly out, work carefully.**
- **The gas is colorless, odorless, and non-poisonous.**

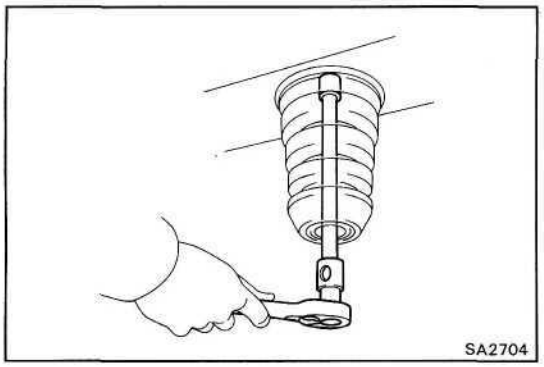

INSTALLATION OF COIL SPRING AND REAR SHOCK ABSORBER

(See page SA-145)

1. INSTALL SPRING FOLLOW

Install the spring follow to the frame with the bolt.

Torque: 155 kg-cm (11 ft-lb, 15 N·m)

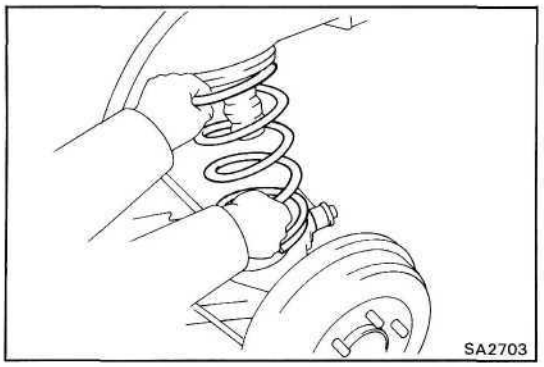

2. INSTALL COIL SPRING

3. JACK UP REAR AXLE HOUSING

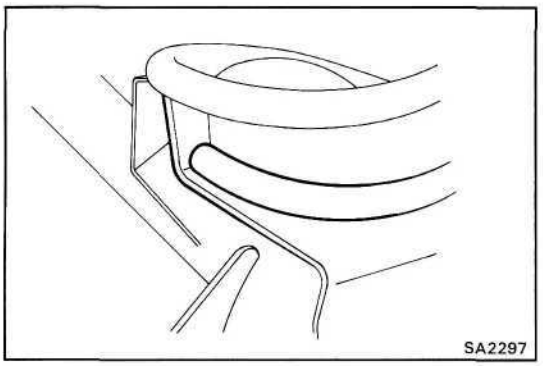

4. CHECK POSITION OF COIL SPRING END

Check that the coil spring end is installed correctly.

If the coil spring end is not in correct position, reinstall the coil spring.

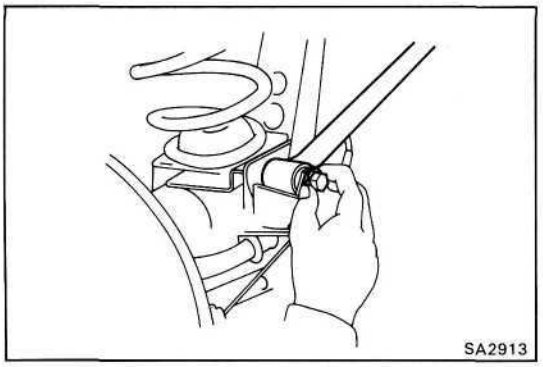

5. CONNECT LATERAL CONTROL ROD

Temporarily connect the lateral control rod to the axle housing with the bolt, washer and bushing.

HINT: Insert the bolt from the front of the vehicle (shock absorber side.).

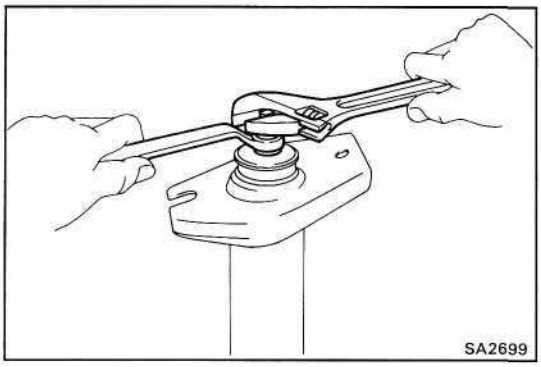

6. INSTALL SHOCK ABSORBER

(a) Install the retainers, cushions and bracket to shock absorber with the nut.

Torque: 700 kg-cm (51 ft-lb, 67 N·m)

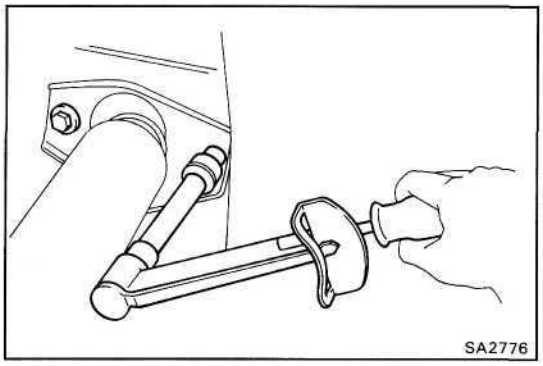

(b) Install the shock absorber to the frame with the two bolts.

Torque: 510 kg-cm (37 ft-lb, 50 N·m)

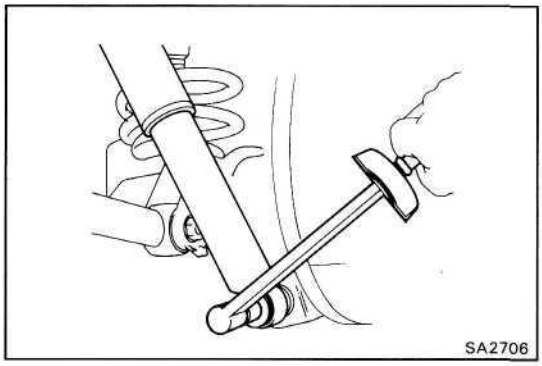

(c) Connect the shock absorber, cushions and retainer to the axle housing with bolt.

Torque: 650 kg-cm (47 ft-lb, 64 N·m)

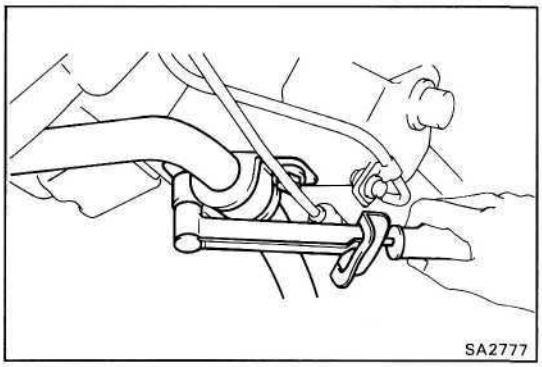

7. INSTALL STABILIZER BAR BRACKETS TO REAR AXLE SHAFT

Install the stabilizer bar and bracket to the axle housing with the two bolts.

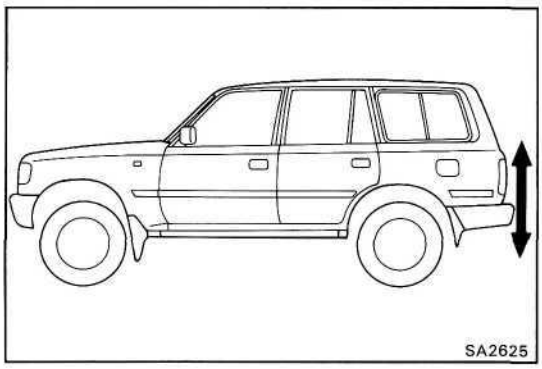

8. INSTALL WHEEL AND LOWER VEHICLE

9. STABILIZE SUSPENSION

(a) Lower the vehicle.

(b) Bounce the vehicle up and down to stabilize the suspension.

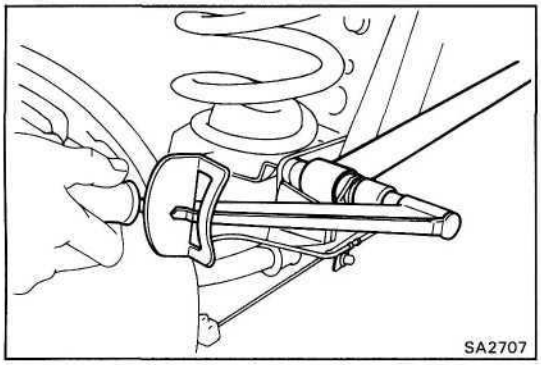

10. TIGHTEN LATERAL CONTROL ROD NUT

(a) Jack up the rear axle housing and support it with stands.

(b) Torque the lateral control rod nut.

Torque: 2,500 kg-cm (181 ft-lb, 245 N·m)

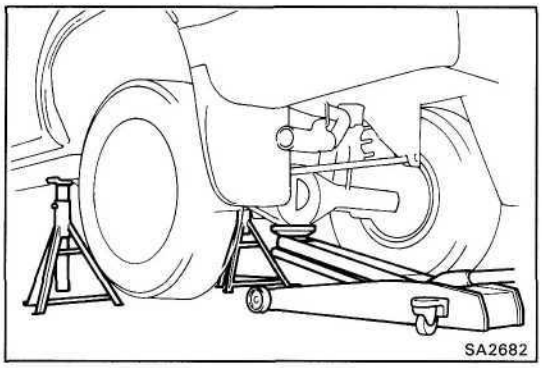

Lateral Control Rod

(See page SA-145)

REMOVAL OF LATERAL CONTROL ROD

1. JACK UP AND SUPPORT VEHICLE

Jack up the rear axle housing and support the frame with stands. Hold the rear axle housing with a jack.

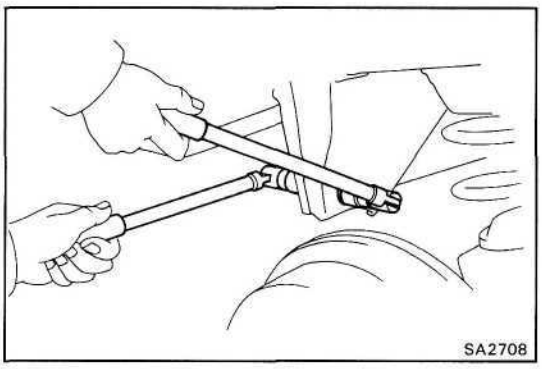

2. REMOVE LATERAL CONTROL ROD

(a) Remove the bolt and nut holding the lateral control rod to the frame and disconnect the lateral control rod.

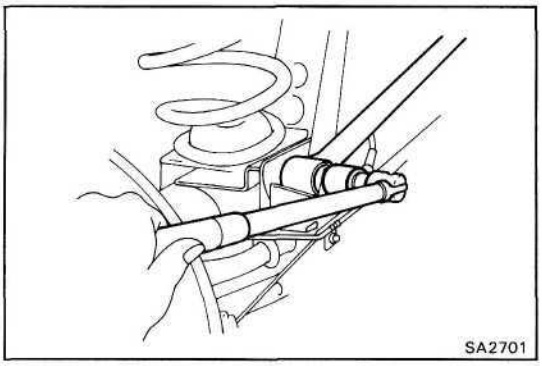

(b) Remove the bolt holding the lateral control rod to the rear axle housing, and remove the lateral control rod.

(c) Remove the bushing.

INSTALLATION OF LATERAL CONTROL ROD

(See page SA-145)

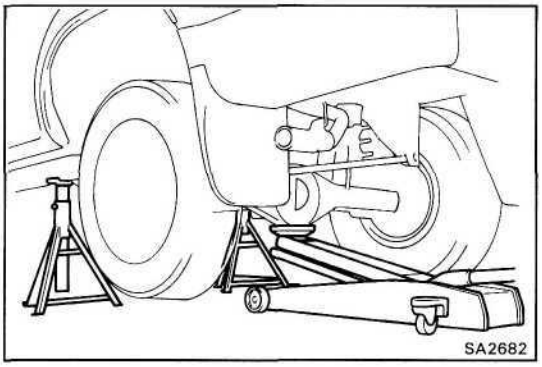

1. INSTALL LATERAL CONTROL ROD

(a) Raise the axle housing until the frame is free from the stands.

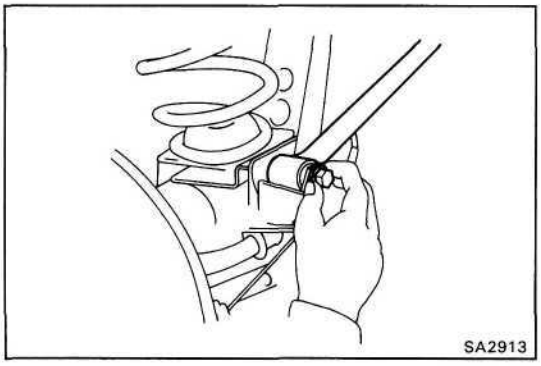

(b) In this order, temporarily install the bushing, lateral control rod and bolt on the rear axle housing.

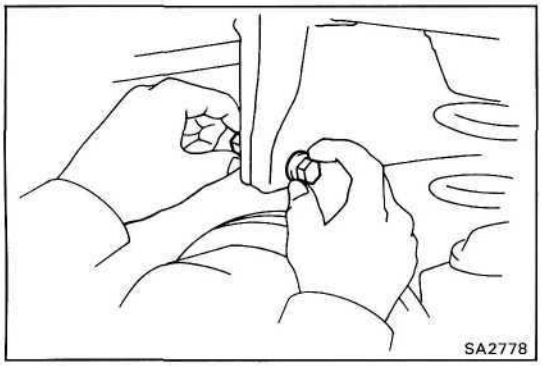

(c) Temporarily install the lateral control rod to the frame with the bolt, plate washer and nut.

HINT: Insert the bolt from the front of the vehicle (shock absorber side).

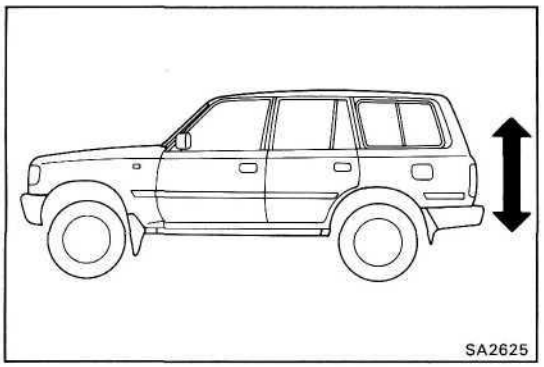

2. STABILIZE SUSPENSION

Lower the vehicle and boucne the vehicle up and down to stabilize the suspension.

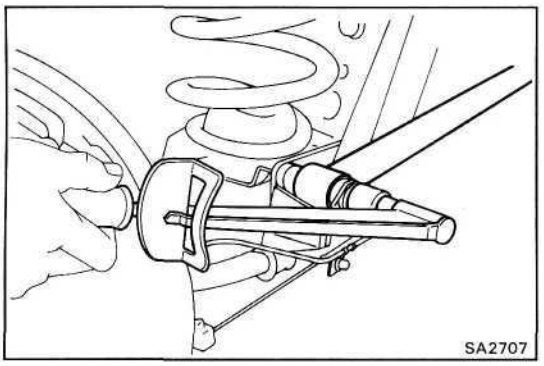

3. TIGHTEN NUT HOLDING LATERAL CONTROL ROD TO REAR AXLE HOUSING

Torque: 2,500 kg-cm (181 ft-lb, 245 N-m)

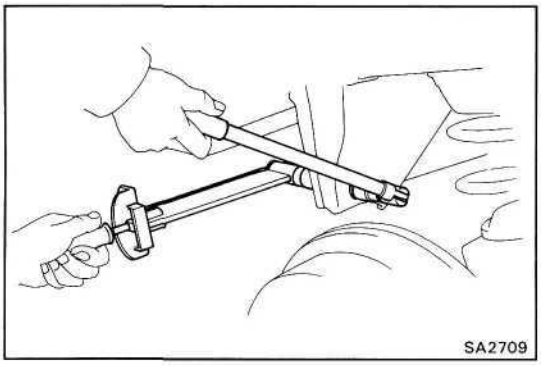

4. TIGHTEN NUT HOLDING LATERAL CONTROL ROD TO FRAME

Torque: 1,800 kg-cm (130 ft-lb, 177 N-m)

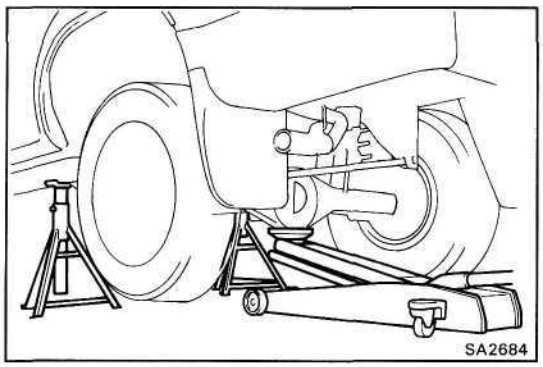

Upper and Lower Control Arms

(See page SA-145)

REMOVAL OF UPPER AND LOWER CONTROL ARMS

1. JACK UP AND SUPPORT VEHICLE

Jack up the rear axle housing and support the frame with stands.

Hold the rear axle housing with a jack.

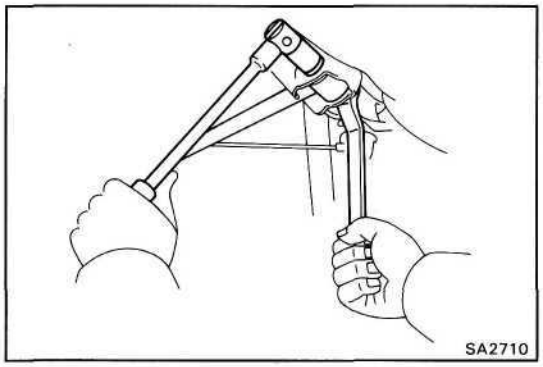

2. REMOVE UPPER CONTROL ARM

(a) Remove the bolt, plate washer and nut holding the upper control arm to the frame.

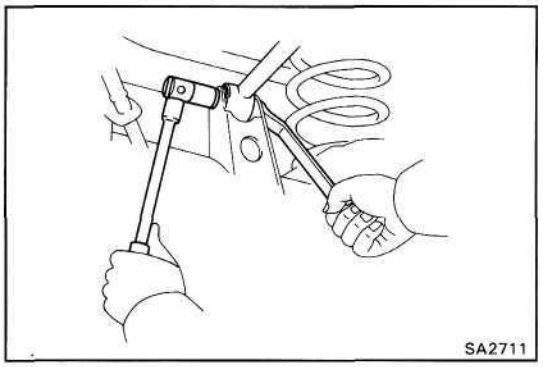

(b) Remove the bolt, plate washer and nut holding the upper control arm to the rear axle housing, and remove the upper control arm.

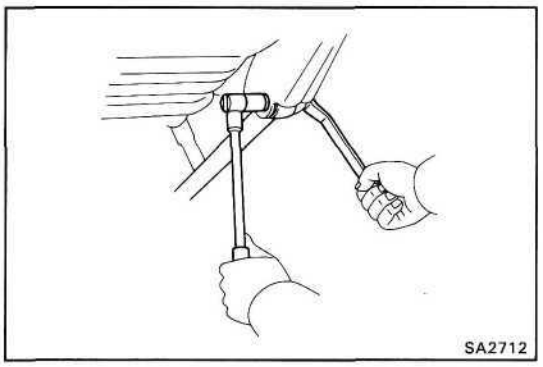

3. REMOVE LOWER CONTROL ARM

(a) Remove the bolt, plate washer and nut holding the lower control arm to the frame.

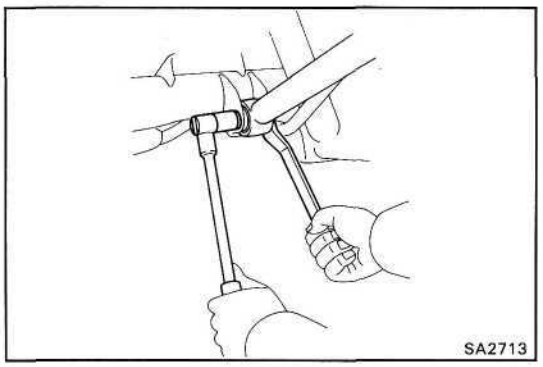

(b) Remove the bolt, plate washer and nut holding the lower control arm to the rear axle housing, and remove the lower control arm.

INSTALLATION OF UPPER AND LOWER CONTROL ARMS

(See page SA-145)

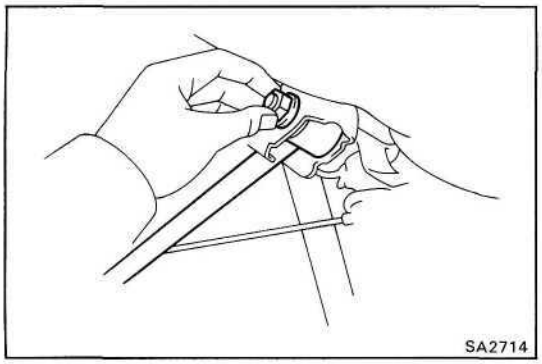

1. INSTALL UPPER CONTROL ARM

(a) Temporarily install the upper control arm on the frame with the bolt, plate washer and nut.

HINT: Insert the bolt from the outside of the vehicle.

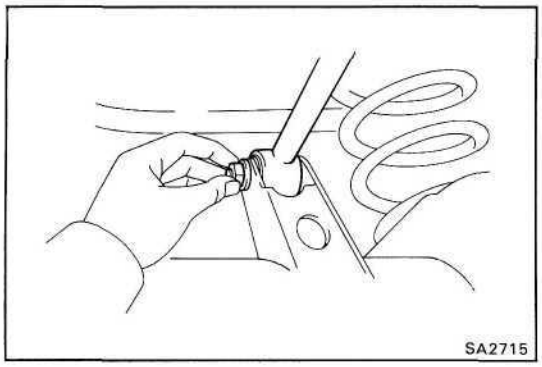

(b) Temporarily install the upper control arm on the rear axle housing with the bolt, plate washer and nut.

HINT: Insert the bolt from the outside of the vehicle.

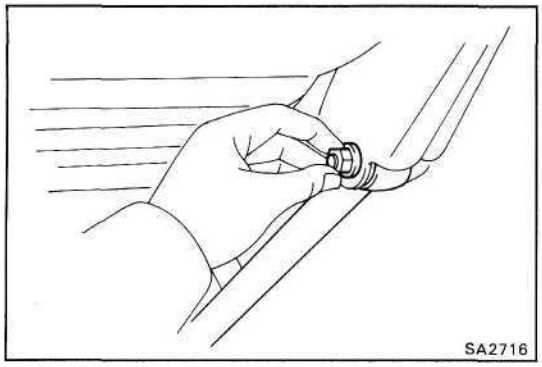

2. INSTALL LOWER CONTROL ARM

(a) Temporarily install the lower control arm on the frame with the bolt, plate washer and nut.

HINT: Insert the bolt from the outside of the vehicle.

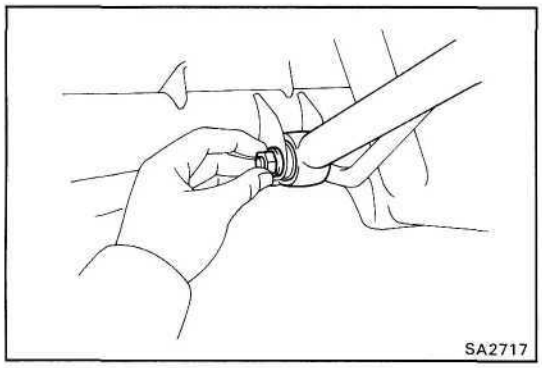

(b) Temporarily install the lower control arm on the rear axle housing with the bolt, plate washer and nut.

HINT: Insert the bolt from the outside of the vehicle.

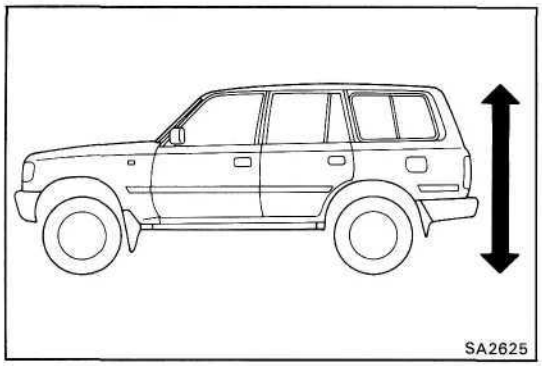

3. STABILIZE SUSPENSION

(a) Lower the vehicle.

(b) Bounce the vehicle up and down to stabilize the suspension.

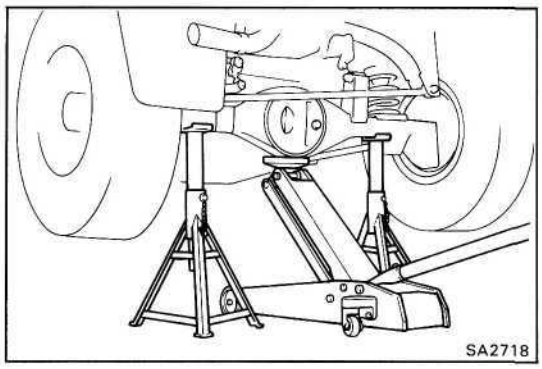

4. **JACK UP VEHICLE**

   Jack up the rear axle housing and support it with stands.

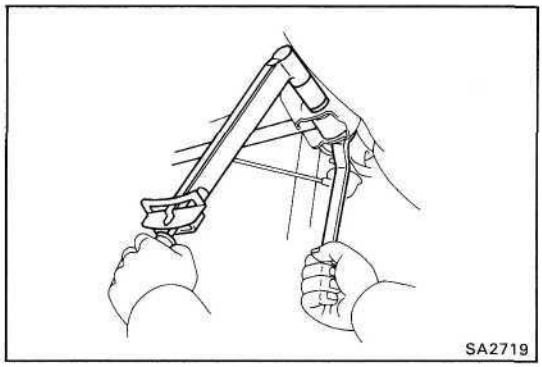

5. **TORQUE BOLT AND NUT HOLDING UPPER CONTROL ARM TO FRAME**

   Torque: 1,800 kg-cm (130 ft-lb, 177 N·m)

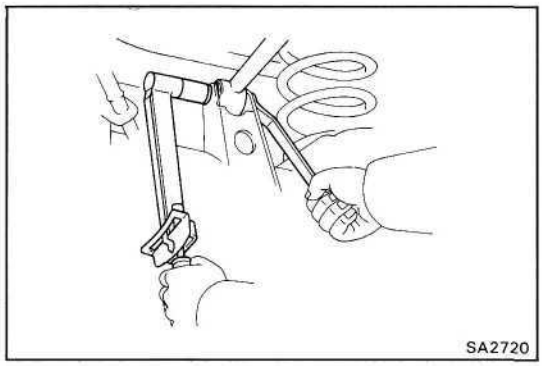

6. **TORQUE BOLT AND NUT HOLDING UPPER CONTROL ARM TO REAR AXLE HOUSING**

   Torque: 1,800 kg-cm (130 ft-lb, 177 N·m)

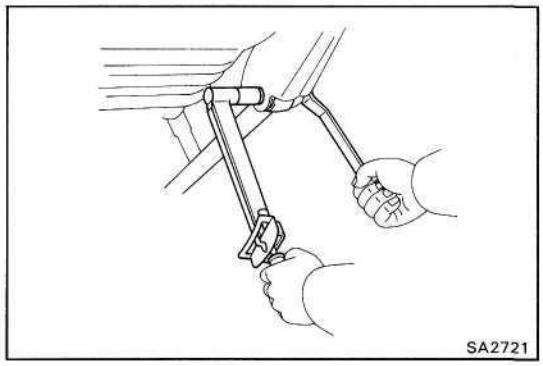

7. **TORQUE BOLT AND NUT HOLDING LOWER CONTROL ARM TO FRAME**

   Torque: 1,800 kg-cm (130 ft-lb, 177 N·m)

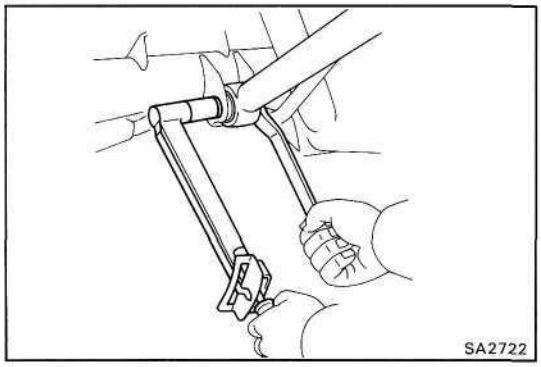

8. **TORQUE BOLT AND NUT HOLDING LOWER CONTROL ARM TO REAR AXLE HOUSING**

   Torque: 1,800 kg-cm (130 ft-lb, 177 N·m)

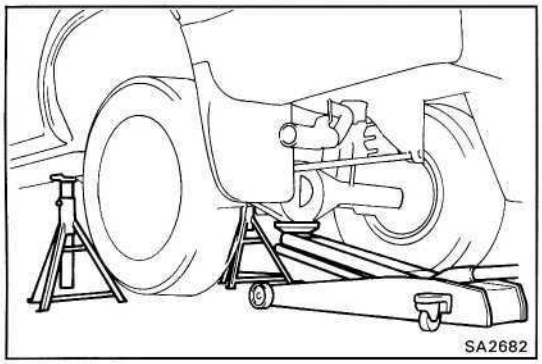

Stabilizer Bar

(See page SA-145)

REMOVAL OF STABILIZER BAR

1. JACK UP AND SUPPORT VEHICLE

Jack up and support the vehicle on the stands.

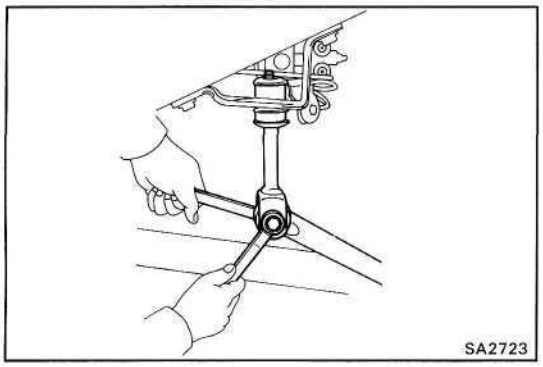

2. REMOVE STABILIZER BAR

(a) Loosen the bolt and nut.

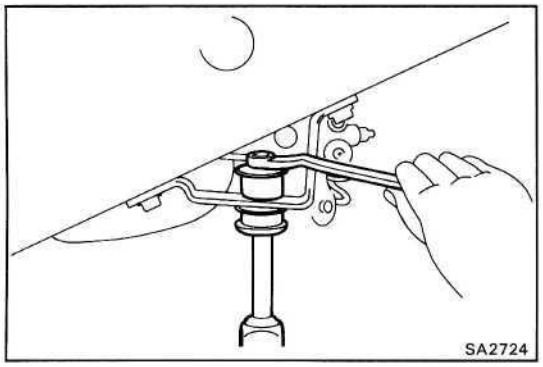

(b) Remove the nut, retainers and cushions, and disconnect the stabilizer bar with the clamp from the frame.

(c) Remove the bolt, nut and clamp from the stabilizer bar.

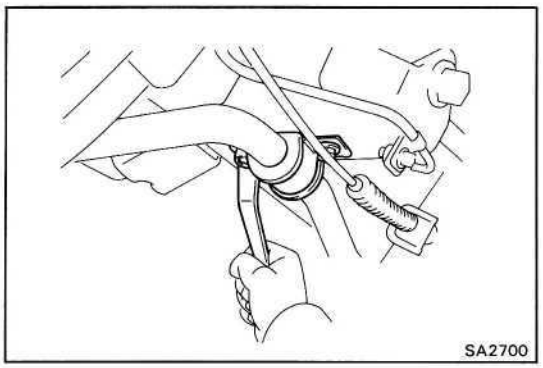

(d) Remove the two bolts and stabilizer bar with the bracket from the axle housing.

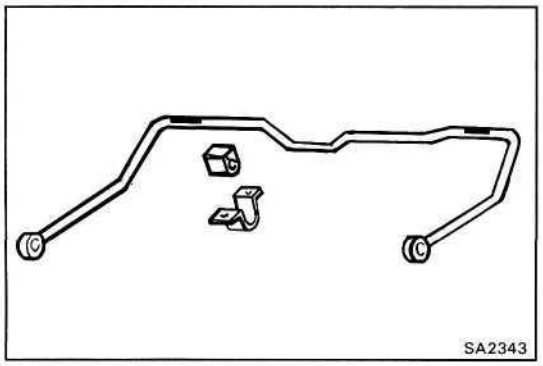

(e) Remove the brackets and cushions from the stabilizer bar.

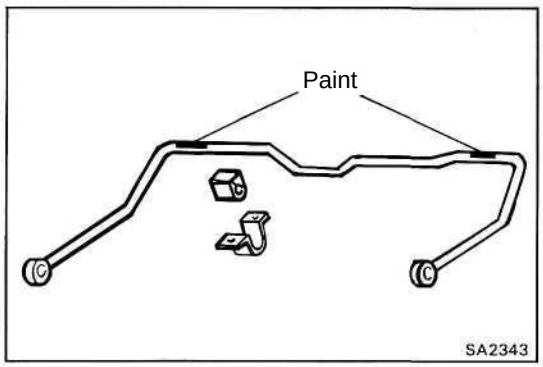

INSTALLATION OF STABILIZER BAR

(See page SA-145)

1. INSTALL STABILIZER BAR

(a) Install the cushions on the lines painted on the stabilizer bar and install the brackets onto the cushions.

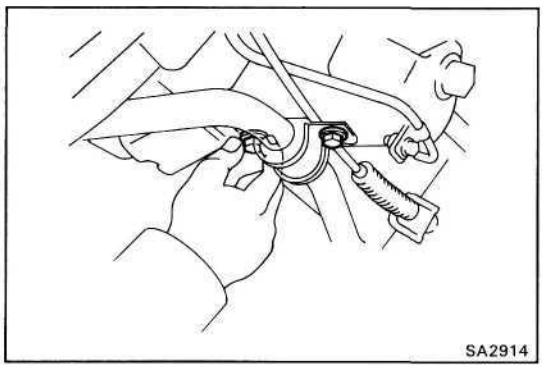

(b) Temporarily install the stabilizer bar with bracket to the axle housing with the two bolts.

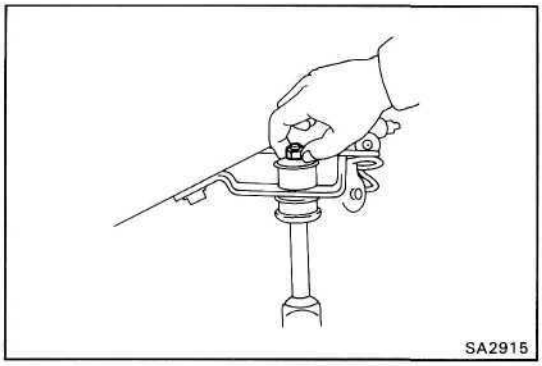

(c) Temporarily install the clamp to the frame with retainers, cushions and nut.

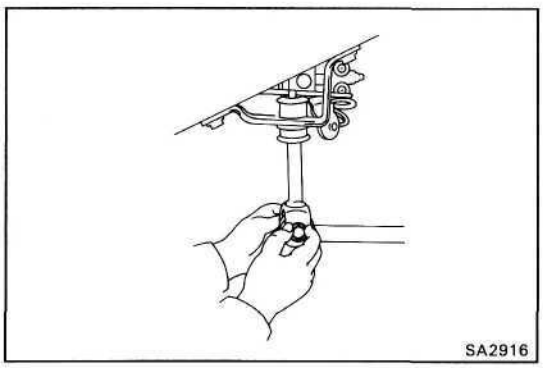

(d) Temporarily install the stabilizer bar to the clamp with bolt and nut.

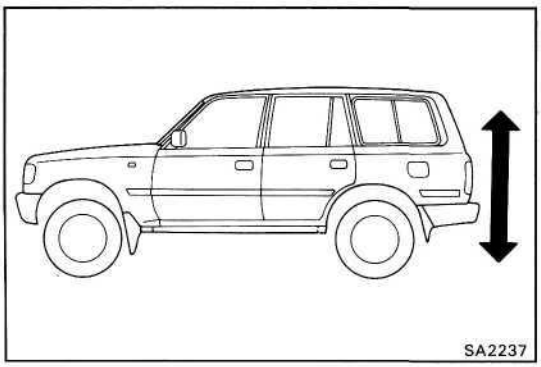

2. STABILIZE SUSPENSION

(a) Lower the vehicle.

(b) Bounce the vehicle up and down to stabilizer the suspension.

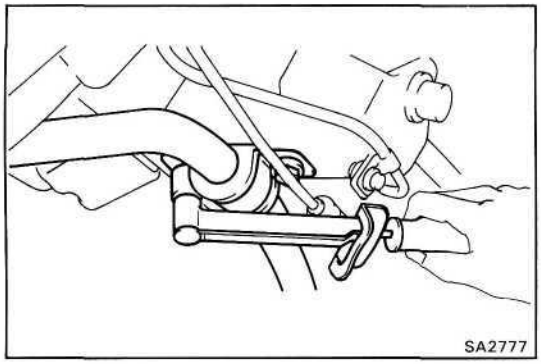

3. TORQUE BRACKET AND CLAMP

(a) Torque the bracket.

Torque: 185 kg-cm (13 ft-lb, 18 N·m)

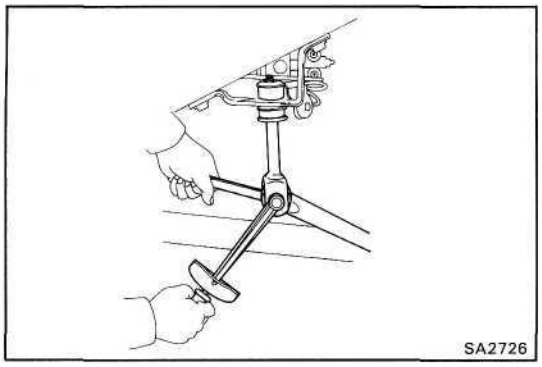

(b) Torque the bolt and nut.

Torque: 260 kg-cm (19 ft-lb, 25 N·m)

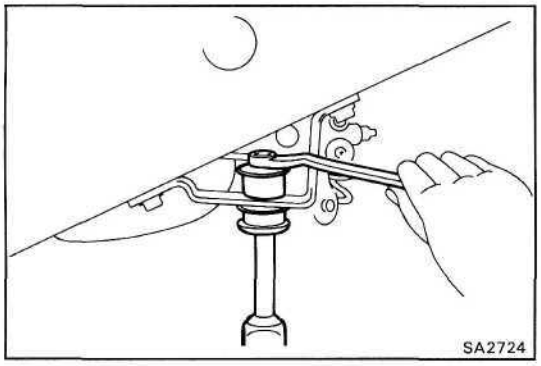

(c) Torque the nut.

Torque: 150 kg-cm (11 ft-lb, 15 N·m)