BODY

	Page
GENERAL INFORMATION	BO-2
HOOD	BO-5
FRONT DOOR	BO-7
REAR DOOR	BO-18
BACK DOOR	
Lift-up Type	BO-29
Swing Out Type	BO-38
MOULDING	
Windshield Moulding	BO-48
Body Outside Moulding	BO-49
Side Protection Moulding	BO-51
Back Door Moulding	BO-54
Wheel Opening Extension	BO-55
WINDSHIELD	BO-57
QUARTER WINDOW GLASS	BO-62
BACK DOOR GLASS	BO-67
MOON ROOF	BO-69
INSTRUMENT PANEL	BO-77
SEAT	BO-83
SEAT BELTS	BO-86
ROOF CARRIER AND ROOF RACK	BO-92
SIDE STEP	BO-93
SPARE WHEEL CARRIER	BO-94
FUEL TANK AND LINE	BO-96
FRAME DIMENSIONS	BO-99

GENERAL INFORMATION

If there is a possibility that the body and / or parts may be damaged, first remove the danger before performing repair operations.

Example:

1. Apply protection tape to the body adjacent to the body part when removeding and installing.

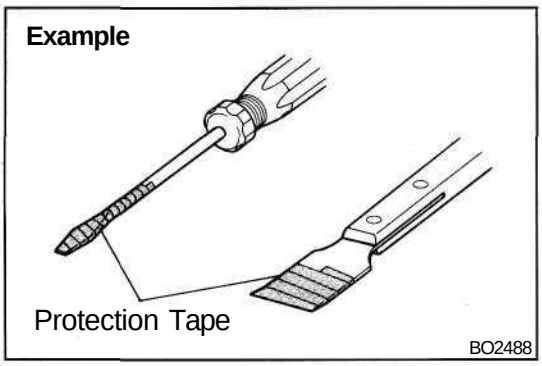

2. When prying off the body parts with a screwdriver or scraper etc., be sure to apply protection tape to the tip or blade to prevent damage to the paint film or body part.

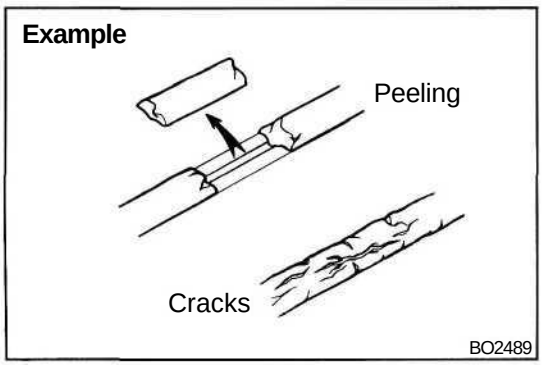

If anti-rust agents are damaged while repairing other parts, be sure to repair the anti-rust agent.

Example:

1. If body sealer, paint film or undercoat are damaged by peeling, cracks etc., be sure to repair each with an anti-rust agent.

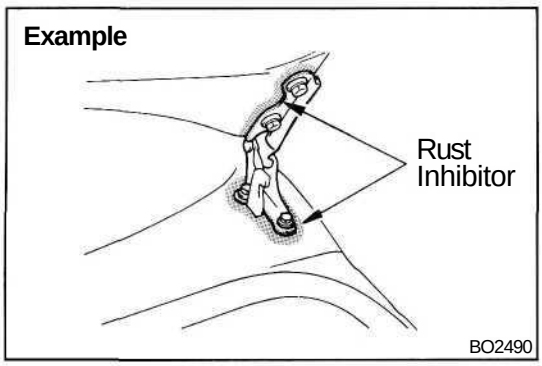

2. If a hinge or exterior body panel is loosened or removed, be sure to apply rust inhibitor after repairs.

CLIPS

The removal and installation methods of typical clips used in body parts are shown in the table below.

HINT: If the clip is damaged during the operation, always replace it with a new clip.

Shape (Example)	Removal/Installation
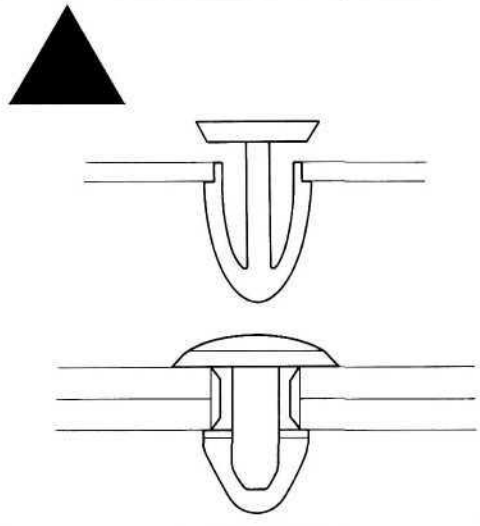 BO4116	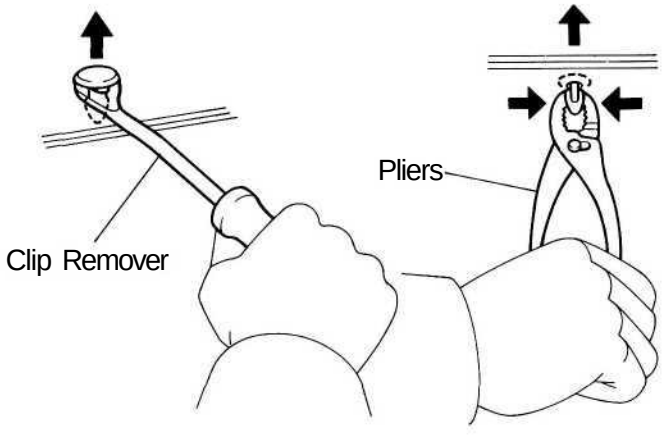 BO4117
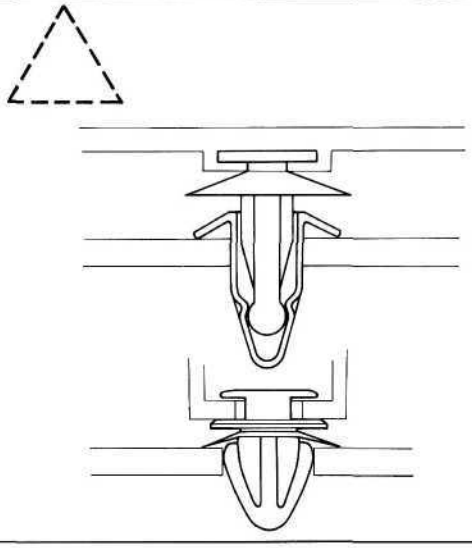 BO4118	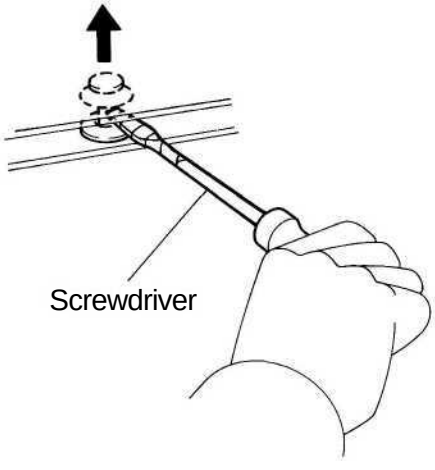 BO4119
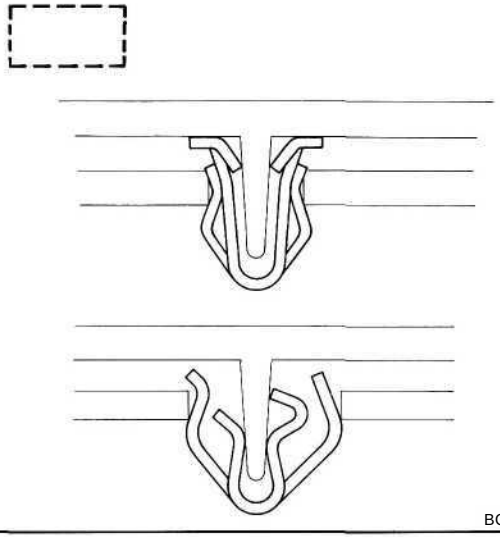 BO4120	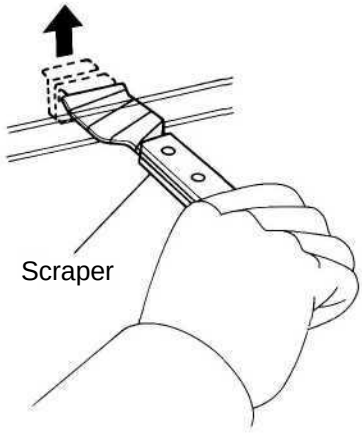 BO4121

CLIPS (Cont'd)

Shape (Example)	Removal/Installation
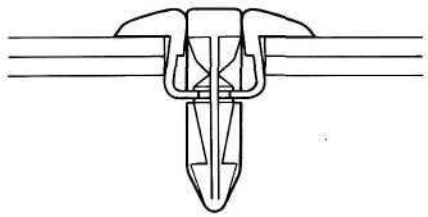 BO4122	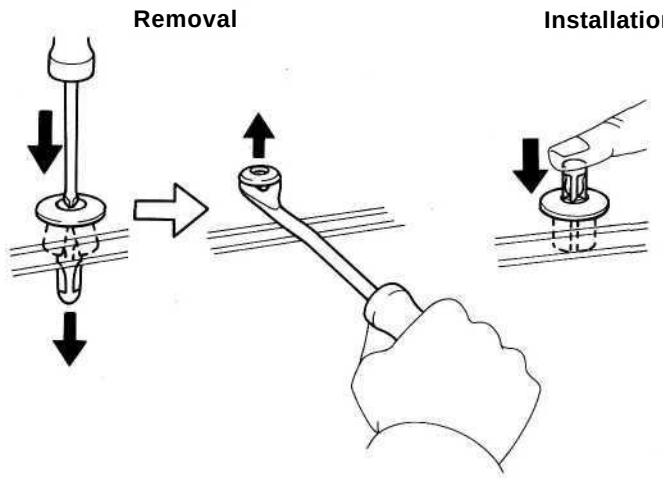 BO4123
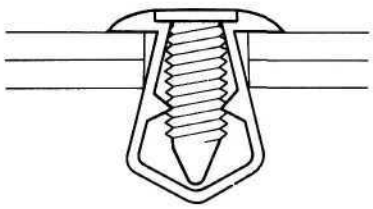 B04124	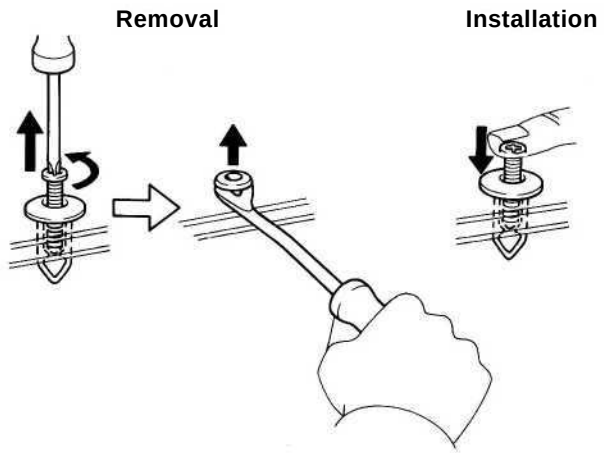 BO412B

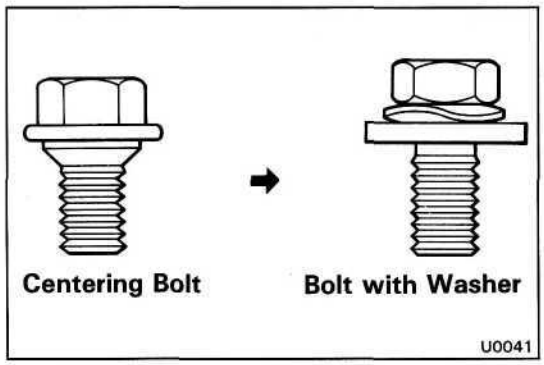

HOOD

ADJUSTMENT OF HOOD

HINT: Since the centering bolt is used as the hood hinge and lock set bolt, the hood and lock cannot be adjusted with it on. Substitute the bolt with washer for the centering bolt.

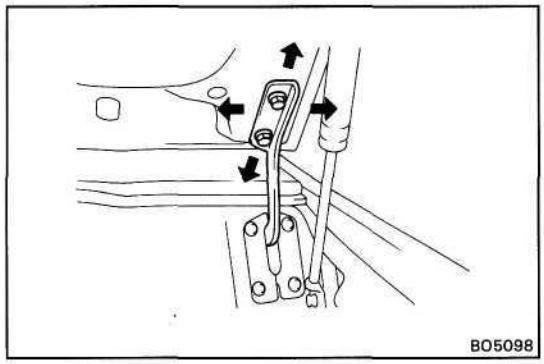

1. ADJUST HOOD IN FORWARD/REARWARD AND LEFT/RIGHT DIRECTIONS

Adjust the hood by loosening the hood side hinge bolts.

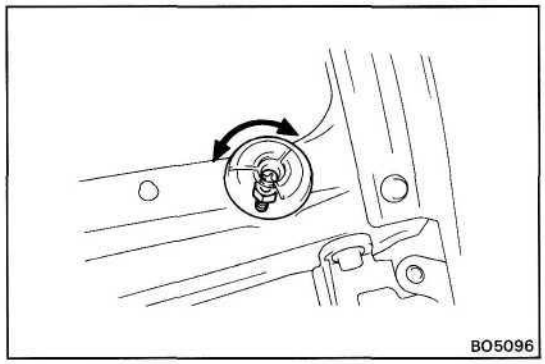

2. ADJUST FRONT EDGE OF HOOD IN VERTICAL DIRECTION

(a) Loosen the lock nut.

(b) Adjust the hood by turning the hood cushions.

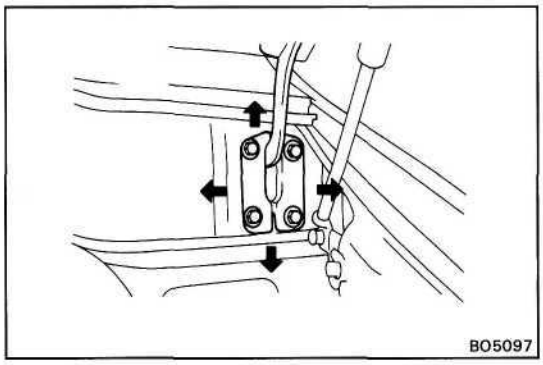

3. ADJUST REAR EDGE OF HOOD IN VERTICAL DIRECTION

Adjust the hood by loosening the body side hinge bolts.

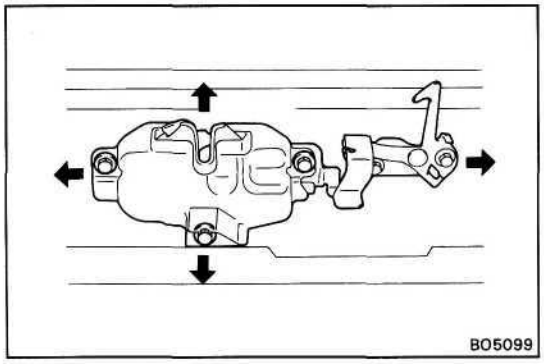

4. ADJUST HOOD LOCK

Adjust the hood lock by loosening the mounting bolts.

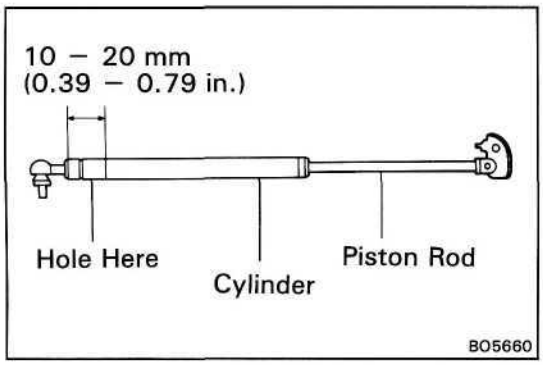

HOOD DAMPER STAY

NOTICE: Handling the damper.

(a) Do not disassemble the damper because the cylinder is filled with pressurized gas.

(b) If the damper is to be replaced, drill a 2.0 — 3.0 mm (0.079 - 0.118 in.) hole in the bottom of the removed damper cylinder to completely release the high-pressure gas before disposing of it.

(c) When drilling, chips may fly out so work carefully.

(d) The gas is colorless, odorless and non-toxic.

(e) When working, handle the damper carefully. Never score or scratch the exposed part of the piston rod, and never allow paint or oil to get on it.

(f) Do not turn the piston rod and cylinder with the damper fully extended.

FRONT DOOR

COMPONENTS

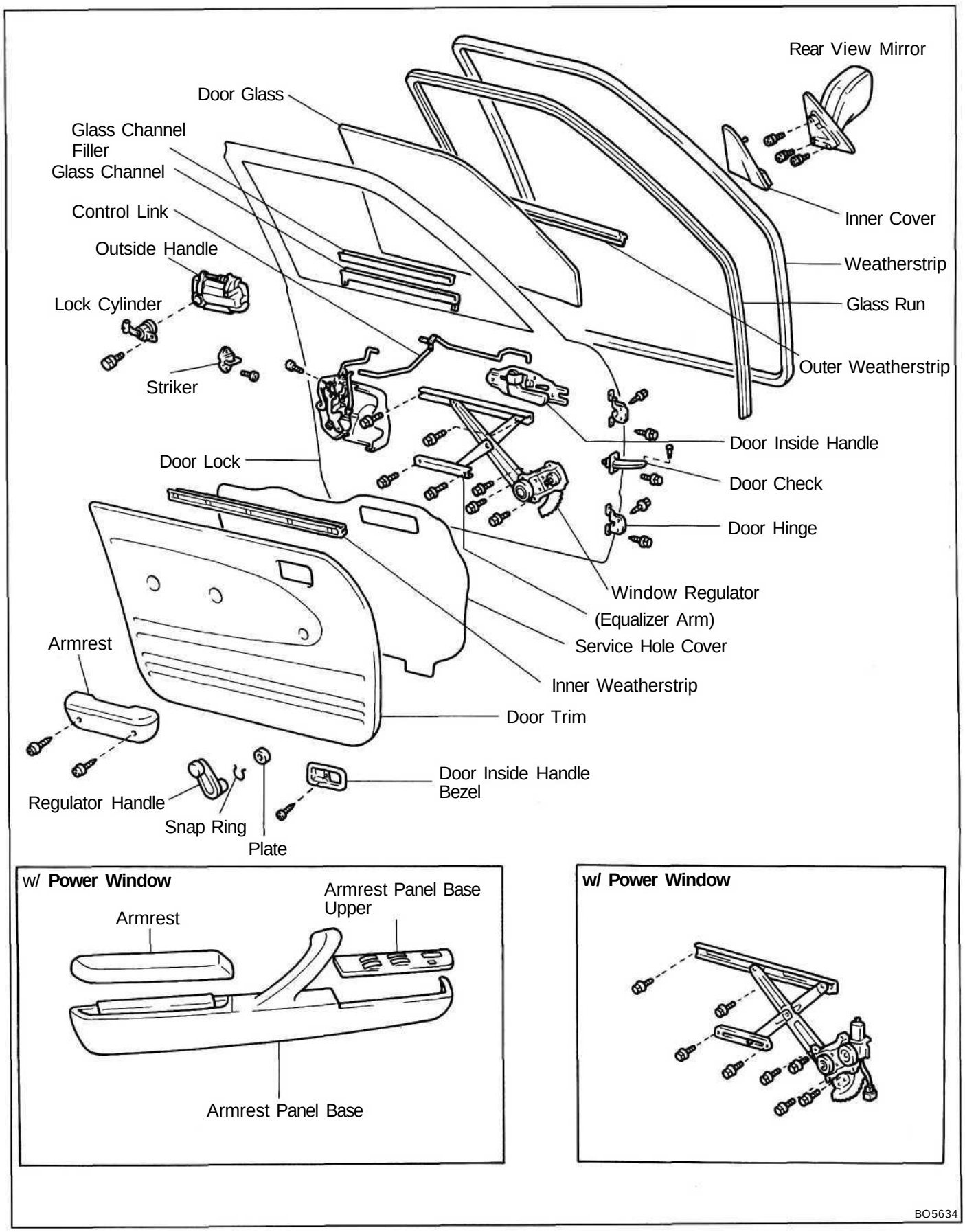

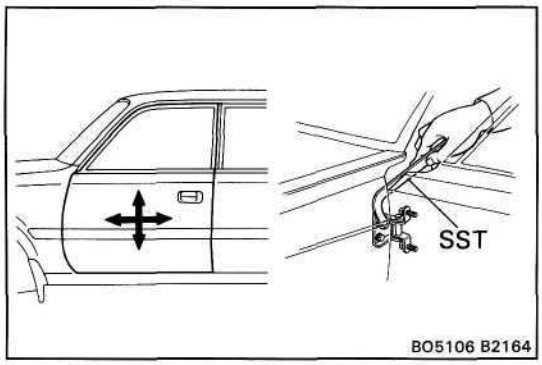

ADJUSTMENT OF FRONT DOOR

1. ADJUST DOOR IN FORWARD/REARWARD AND VERTICAL DIRECTION

Using SST, adjust the door by loosening the body side hinge bolts.
SST 09812-00010

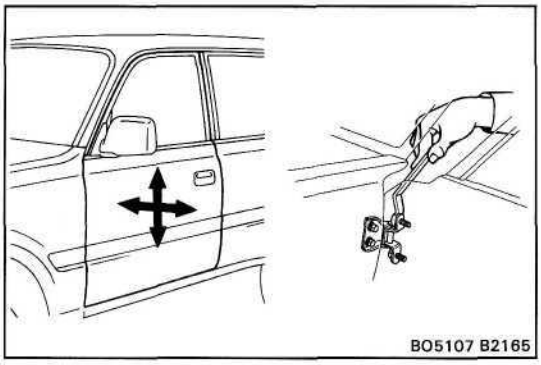

2. ADJUST DOOR IN LEFT/RIGHT AND VERTICAL DIRECTIONS

Adjust the door by loosening the door side hinge bolts.

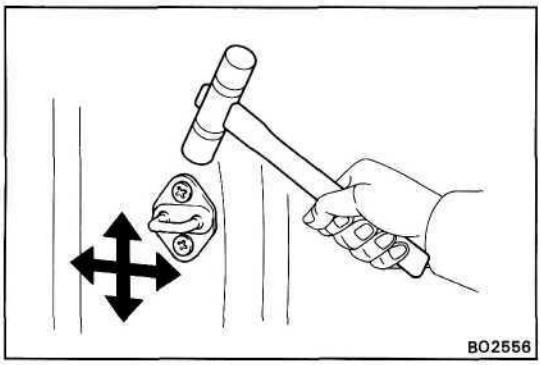

3. ADJUST DOOR LOCK STRIKER

(a) Check that the door fit and door lock linkages are adjusted correctly.

(b) Adjust the striker position by slightly loosening the striker mounting screws, and hitting the striker with a hammer. Tighten the striker mounting screws again.

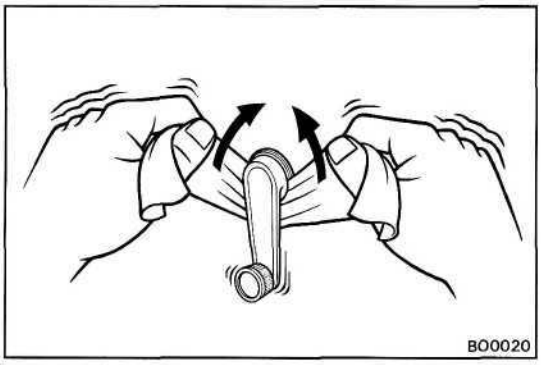

DISASSEMBLY OF FRONT DOOR

(See page BO-7)

1. (w/o Power Window)
REMOVE REGULATOR HANDLE

Pull off the snap ring with a shop rag and remove the regulator handle and plate.

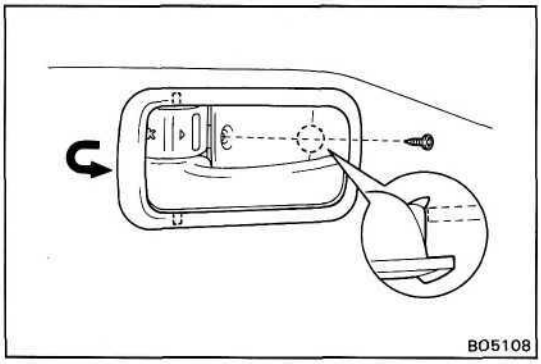

2. REMOVE DOOR INSIDE HANDLE BEZEL

Remove the screw and pull the inside handle bezel.

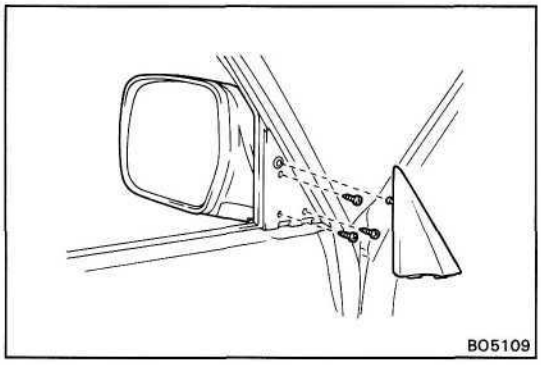

3. REMOVE REAR VIEW MIRROR

(a) Remove the cover.

(b) (w/ Remote Control Mirror)
Disconnect the connector from the mirror.

(c) Remove three screws and the rear view mirror.

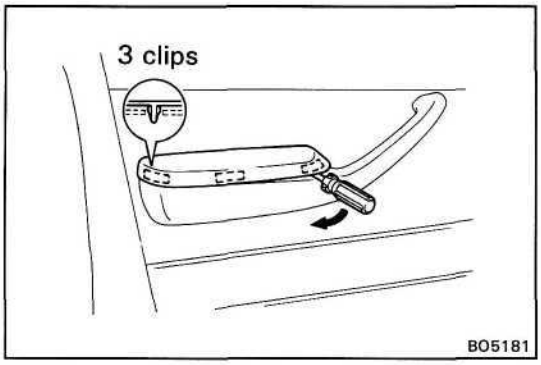

4. REMOVE ARMREST

(a) Insert the screwdriver between the armrest and the armrest panel base to pry out.

HINT: Tape the screwdriver tip before use.

(b) Remove the armrest.

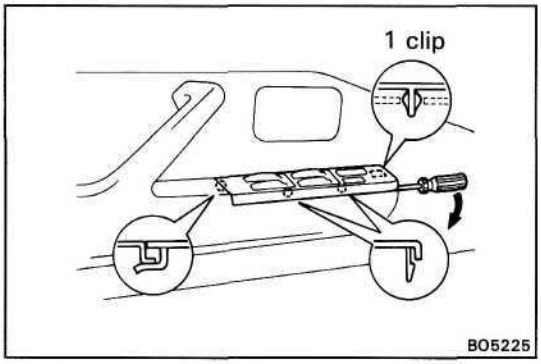

5. (w/ Power Window)
REMOVE ARMREST PANEL BASE UPPER

(a) Insert the screwdriver between the armrest panel base and the armrest panel base upper to pry out.

HINT: Tape the screwdriver tip before use.

(b) Slide the armrest panel base upper forward to remove it, then disconnect the connectors.

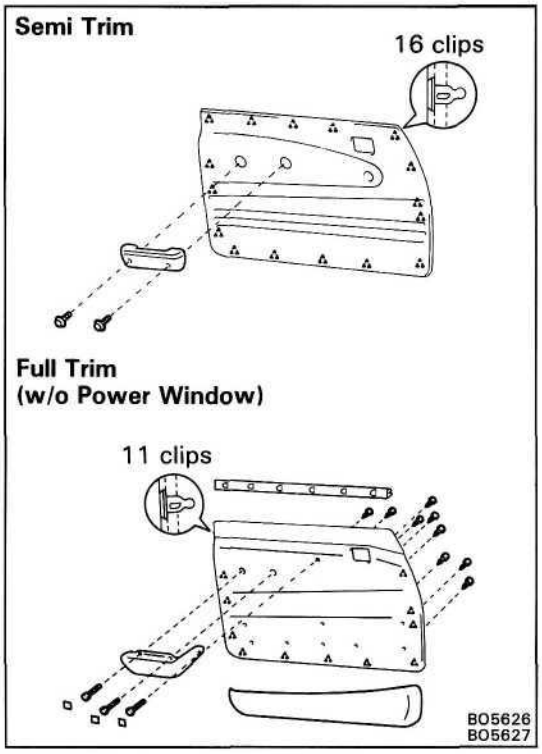

6. REMOVE DOOR TRIM

(a) (Semi Trim)
Remove two screws and the armrest.

(Full Trim)
Remove three screws from the inside door panel.

(b) Insert a screw driver between the retainers and door trim to pry it loose.

HINT: Tape the screwdriver tip before use.

(c) Remove the door trim.

(d) (Full Trim, w/o Power Window)
Remove three screws and the armrest from the door trim.

(Full Trim, w/ Power Window)
Remove eleven screws and the armrest from the door trim.

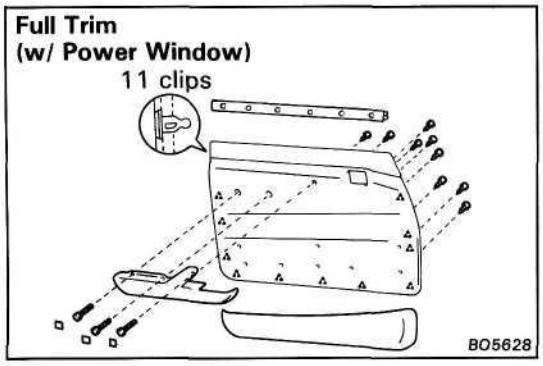

(e) Remove the inner weatherstrip from the door trim.

(f) (Full Trim)
Remove eight screws and the door pocket.

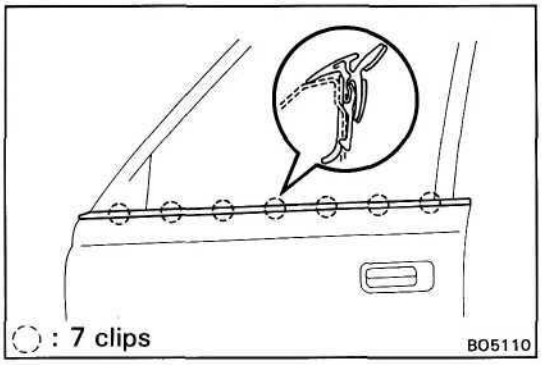

7. REMOVE DOOR BELT MOULDING

Pry out the clips from the edge of the panel, and remove the moulding.

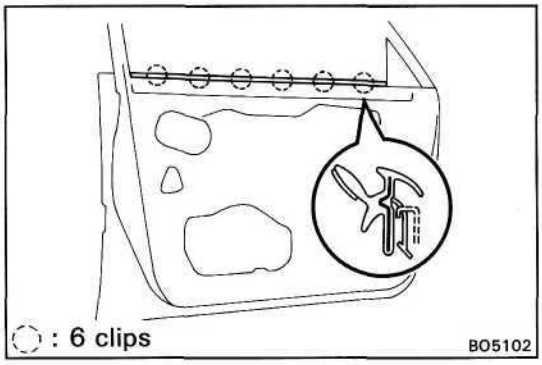

8. (Semi Trim)
REMOVE INNER WEATHERSTRIP

Pry out the clips from the edge of the panel, and remove the inner weatherstrip.

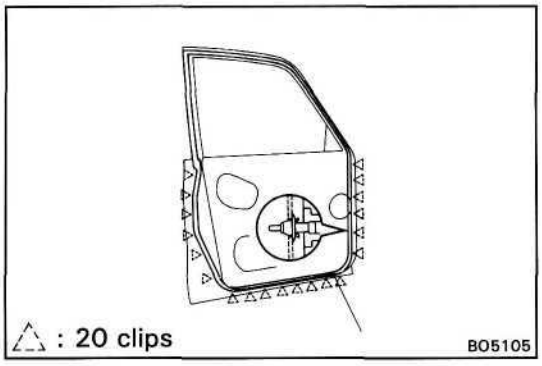

9. REMOVE DOOR WEATHERSTRIP

While pulling the weatherstrip by hand, remove twenty clips using a clip remover.

HINT: Do not pull strongly on the weatherstrip as it may tear.

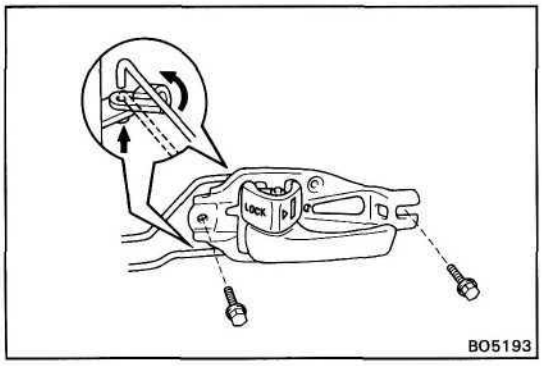

10. REMOVE DOOR INSIDE HANDLE

(a) Remove two bolts.

(b) Disconnect two links from the inside handle.

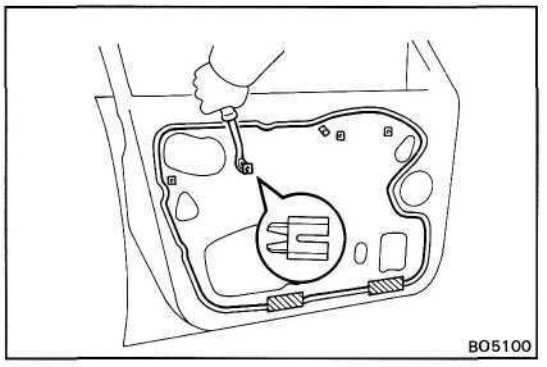

11. REMOVE SERVICE HOLE COVER

(a) (Semi Trim)
Using the clip remover, remove four screw grommets.

(Full Trim)
Using the clip remover, remove five screw grommets.

(b) Remove service hole cover.

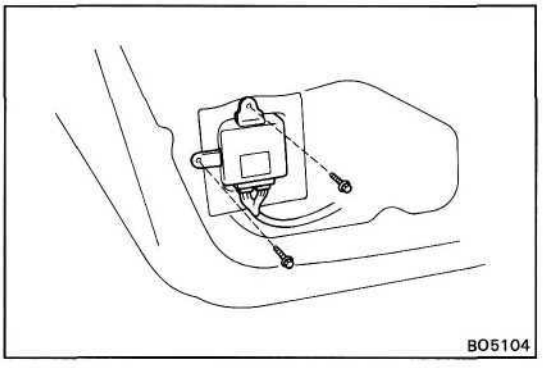

12. (w/ **Power Door Lock)**
REMOVE DOOR LOCK CONTROL RELAY

Remove two bolts and the relay, then disconnect the connector.

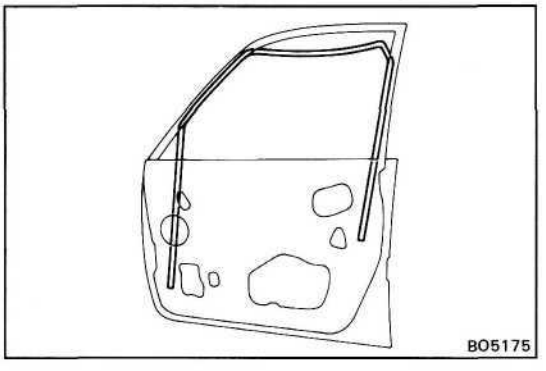

13. REMOVE DOOR GLASS RUN

Pull out the glass run from the door frame.

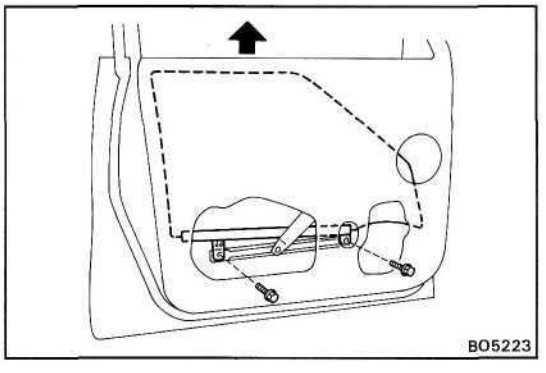

14. REMOVE DOOR GLASS

(a) Remove two glass mounting bolts.

(b) Remove the door glass by pulling it up ward.

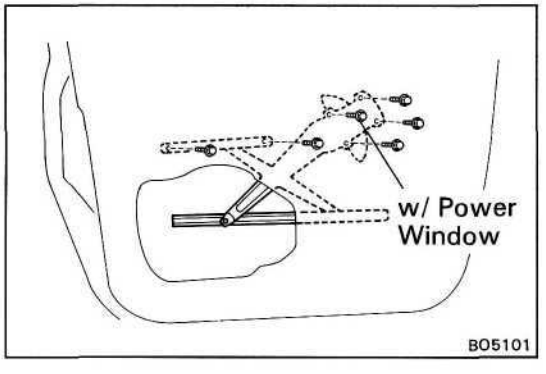

15. REMOVE WINDOW REGULATOR

(a) (w/ Power Window)
Disconnect the connector.

(b) Remove two equalizer arm bracket mounting bolts.

(c) (w/ Power Window)
Remove four regulator mounting bolts.

(w/o Power Window)
Remove three regulator mounting bolts.

(d) Remove the regulator through the service hole.

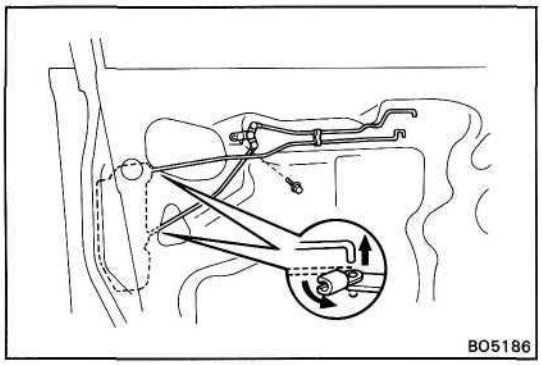

16. REMOVE LOCKING AND OPENING CONTROL LINK

(a) Disconnect two links from the door lock.

(b) Remove the bolt and the locking link.

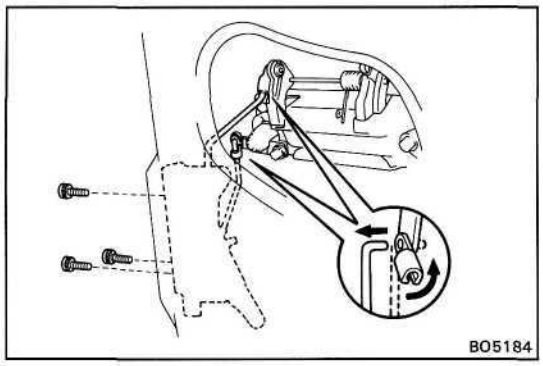

17. REMOVE DOOR LOCK

(a) Disconnect two links from outside handle and the door lock cylinder.

(b) (w/ Power Door Lock)
Disconnect the connector.

(c) Remove three screws.

(d) Remove the door lock through the service hole.

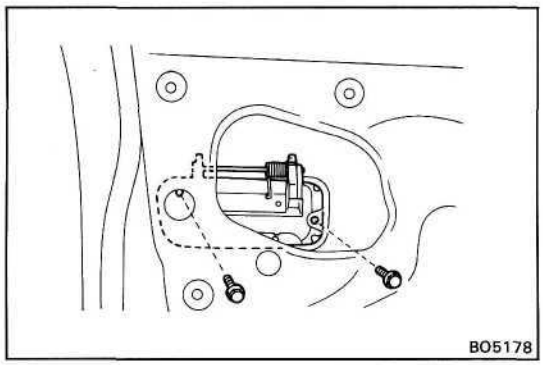

18. REMOVE OUTSIDE HANDLE WITH DOOR LOCK CYLINDER

Remove two bolts and the outside handle with the lock cylinder.

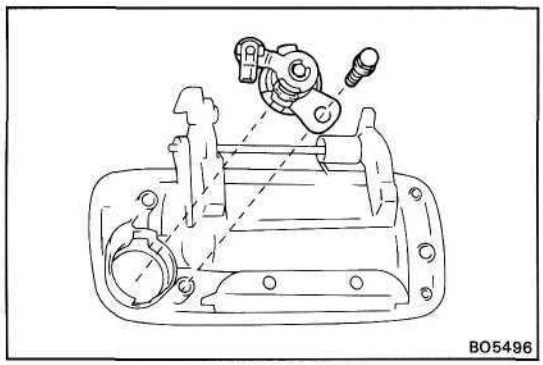

19. REMOVE DOOR LOCK CYLINDER

(a) Remove the bolt from the outside handle.

(b) Turn the lock cylinder clockwize until it stops turning, then pull the lock cylinder straight out.

20. (w/ Speaker)
REMOVE SPEAKER

Remove three screws and the speaker, then disconnect the connector.

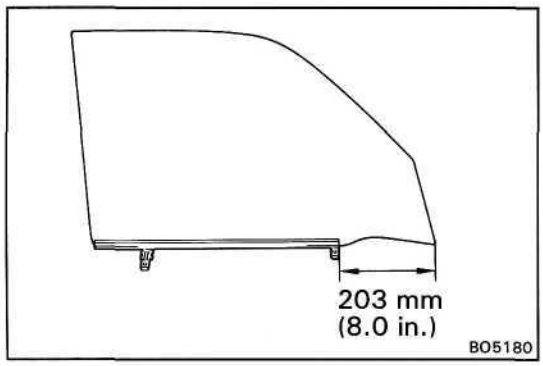

REPLACEMENT OF GLASS

1. REMOVE GLASS CHANNEL WITH SCREWDRIVER OR LIKE OBJECT

2. APPLY SOAPY WATER TO INSIDE OF WEATHERSTRIP

3. INSTALL CHANNEL BY TAPPING IT WITH PLASTIC HAMMER

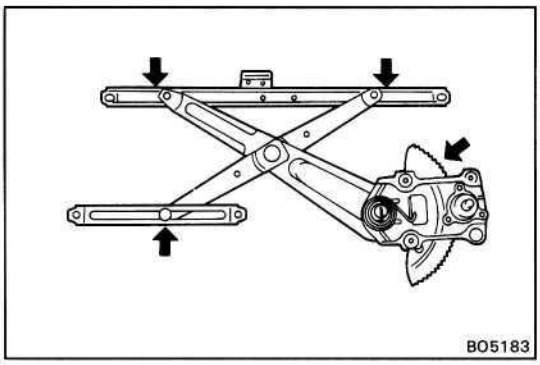

ASSEMBLY OF FRONT DOOR

(See page BO-7)

1. BEFORE INSTALLING PARTS, COAT THEM WITH MP GREASE

(a) Apply MP grease to the sliding surface and gears of the window regulator.

NOTICE: DO not apply MP grease to the spring of the window regulator.

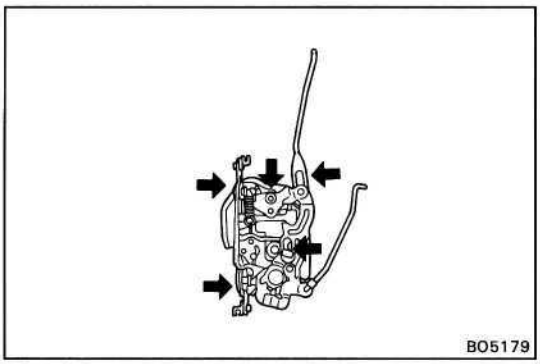

(b) Apply MP grease to the sliding surface of the door lock.

2. (w/ **Speaker)**
INSTALL SPEAKER

Connect the connector and install the speaker with three screws.

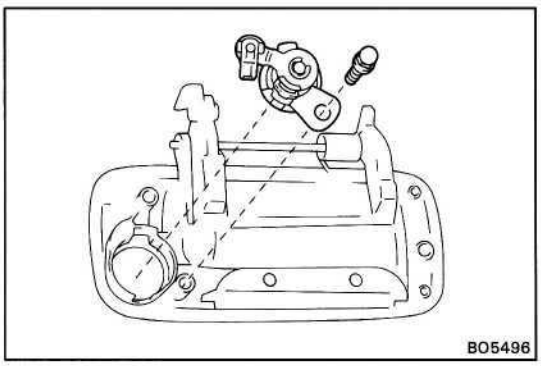

3. INSTALL DOOR LOCK CYLINDER

Install the lock cylinder to the outside handle, turn the lock cylinder anti-clockwize untill it stops with the bolt.

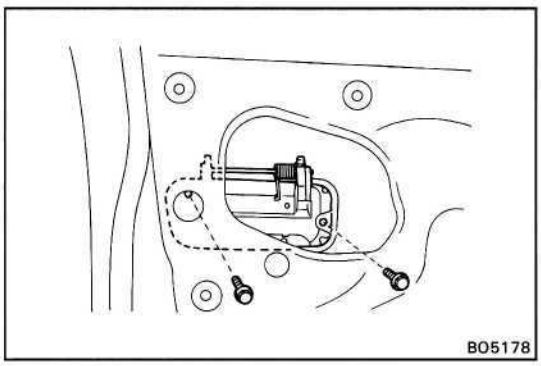

4. INSTALL OUTSIDE HANDLE WITH DOOR LOCK CYLINDER

Install the outside handle with door lock cylinder with two bolts.

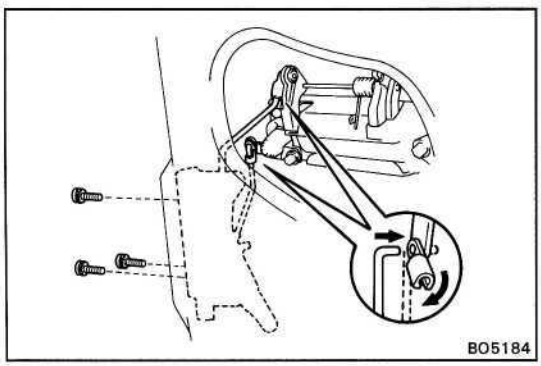

5. INSTALL DOOR LOCK

(a) Install the door lock with three screws.

(b) (w/ Power Door Lock)
Connect the connector.

(c) Connect two links to the outside handle and the door lock cylinder.

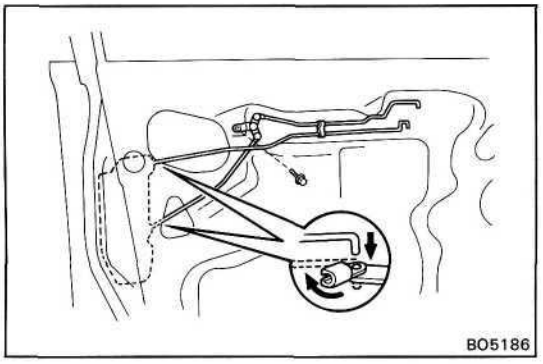

6. INSTALL LOCKING AND OPENING CONTROL LINK

(a) Connect two links to the door lock.

(b) Install the locking link with the bolt.

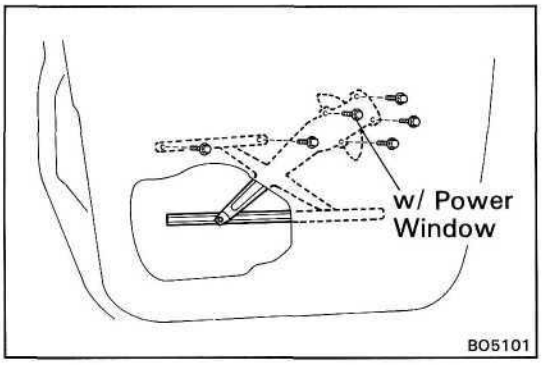

7. INSTALL WINDOW REGULATOR

(a) Place the regulator through the service hole.

(b) (w/ Power Window)
Install four regulator mounting bolts.
(w/o Power Window)
Install three regulator mounting bolts.

(c) Temporarily tighten two equalizer arm bracket bolts.

(d) (w/ Power Window)
Connect the connector.

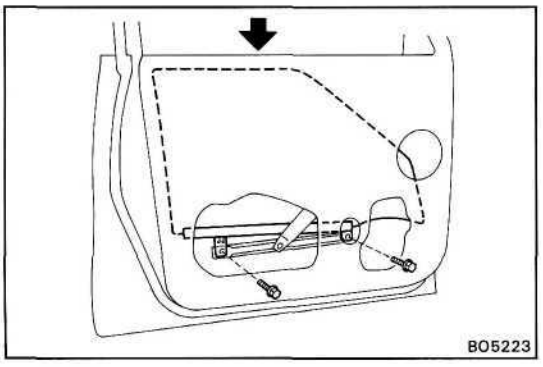

8. INSTALL DOOR GLASS

(a) Insert the glass to the glass guides.

(b) Install the glass to the regulator with two mounting bolts.

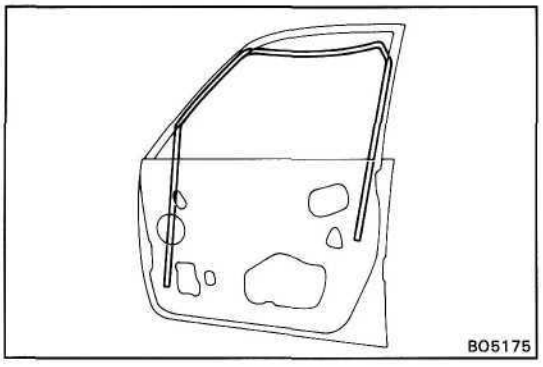

9. INSTALL DOOR GLASS RUN

Install the glass run to the door frame.

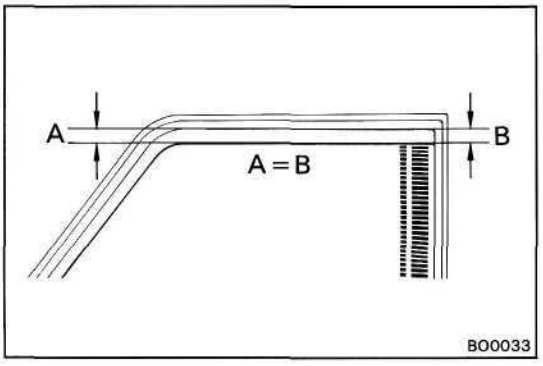

10. ADJUST DOOR GLASS

Adjust the equalizer arm up to down and tighten if where dimensions A and B, as shown are equal.

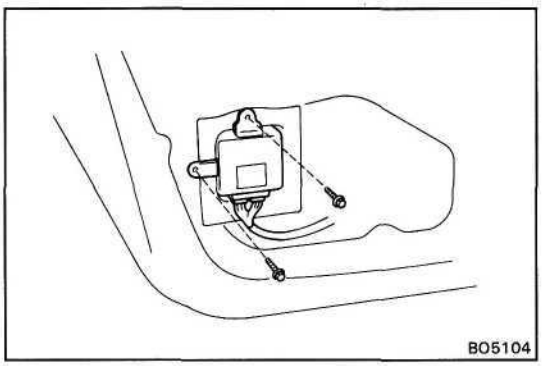

11. (w/ Power Door Lock)
INSTALL DOOR LOCK CONTROL RELAY

Install the relay with two bolts, then connect the connector.

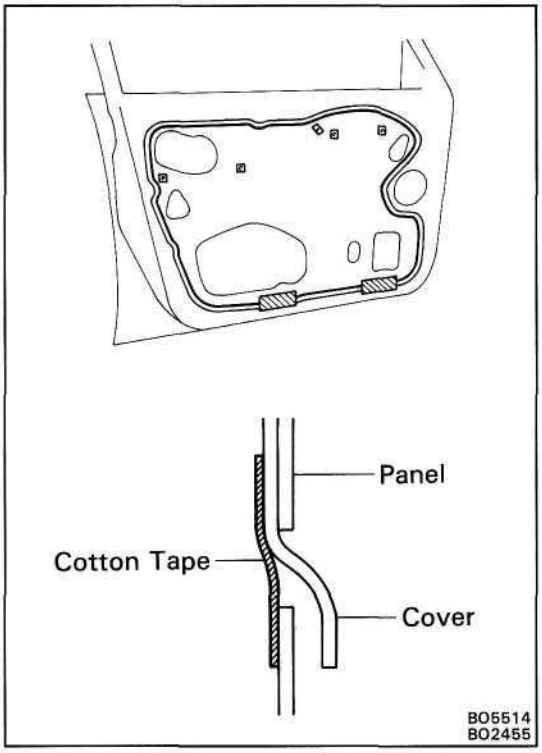

12. INSTALL SERVICE HOLE COVER

(a) Seal the service hole cover with adhesive.

HINT: Bring out the link through the service hole cover.

(b) Insert the lower edge of the cover into the panel slit.

(c) Seal the panel slit with cotton tape.

NOTICE: Do not block the trim clip sealing with the tape.

(d) (Semi Trim)
Install four screw grommets.

(Full Trim)
Install five screw grommets.

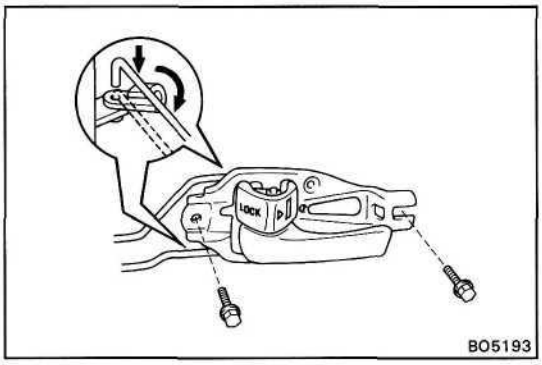

13. INSTALL DOOR INSIDE HANDLE

(a) Connect two links to the inside handle.

(b) Install the inside handle with two bolts.

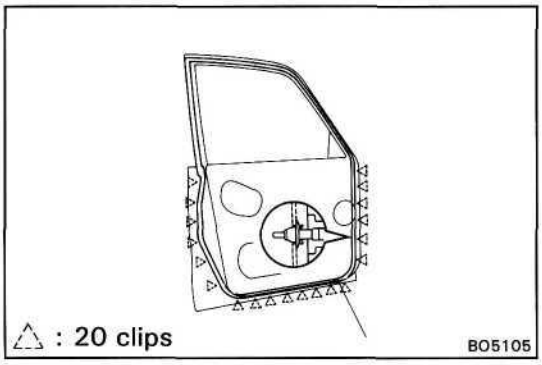

14. INSTALL DOOR WEATHERSTRIP

Install the weatherstrip with clips to the panel.

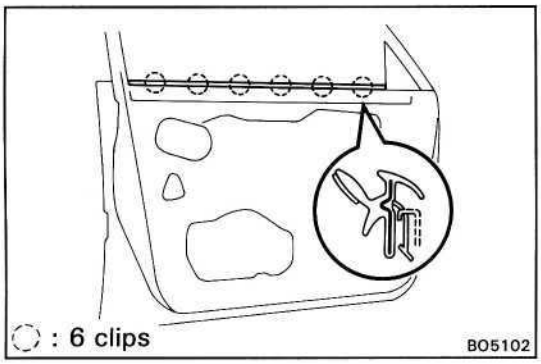

15. (Semi Trim)
INSTALL INNER WEATHERSTRIP

Insert the claw of the clips into the upper panel slit and push the weatherstrip onto the panel.

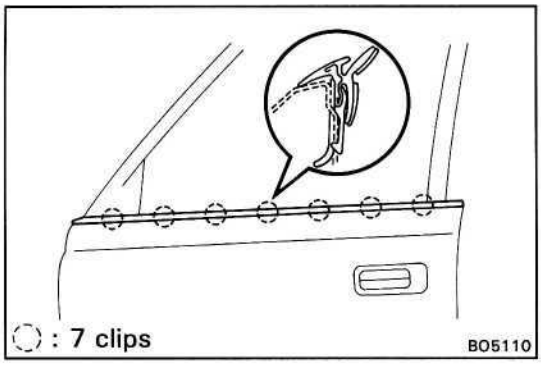

16. INSTALL DOOR BELT MOULDING

Insert the claw of the clips into the upper panel slit and push the moulding onto the panel.

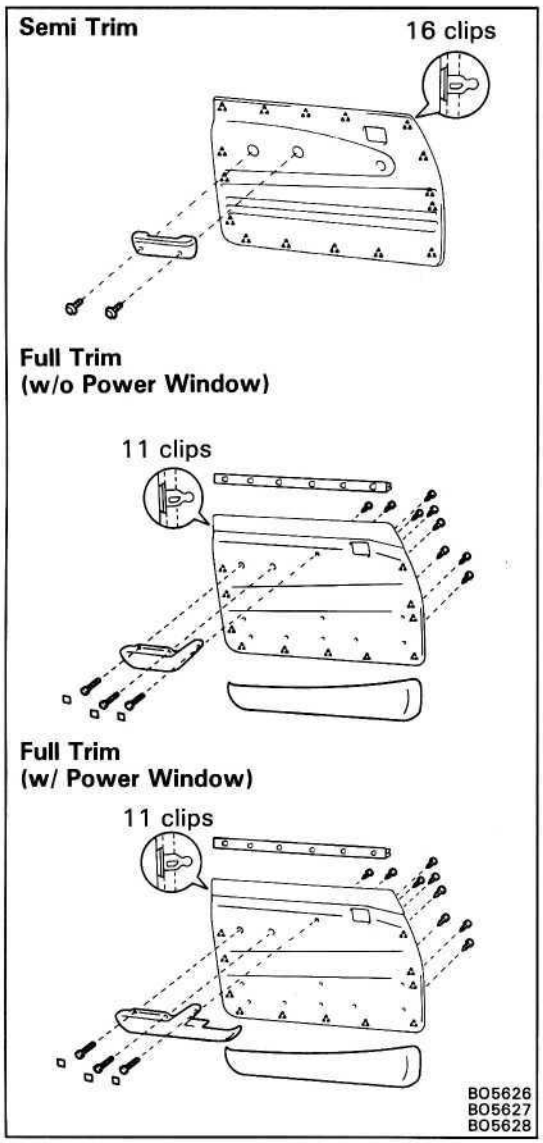

17. INSTALL DOOR TRIM

(a) (Full Trim)
Install the door pocket with eight screws to the door trim.

(b) Install the inner weatherstrip to the door trim.

(c) (Full Trim, w/o Power Window)
Install the armrest base with three screws to the door trim.

(Full Trim, w/ Power Window)
Install the armrest base with eleven screws to the door trim.

(d) Install the door trim with retainers to the inside panel by tapping.

(e) (Semi Trim)
Install the armrest with two screws.

(Full Trim)
Install the armrest with three screws.

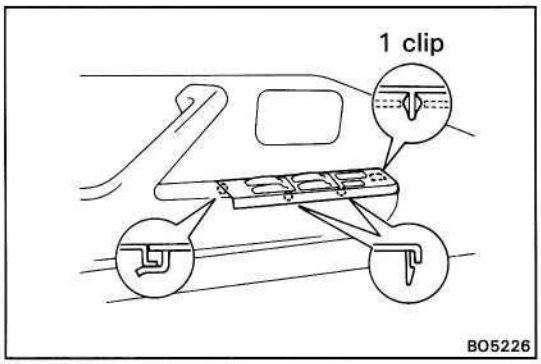

18. (w/ Power Window)
INSTALL ARMREST PANEL BASE UPPER

(a) Connect the connector.

(b) Slide the panel rearward and tap the panel to install it.

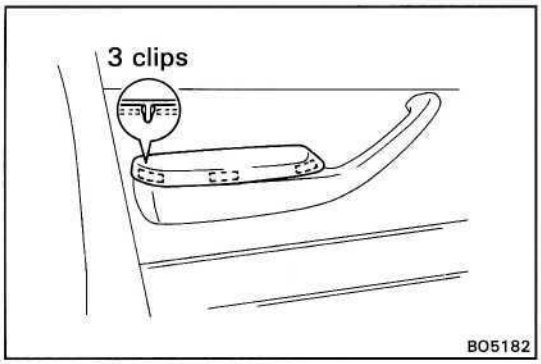

19. INSTALL ARMREST

Install the armrest to the armrest panel base by tapping.

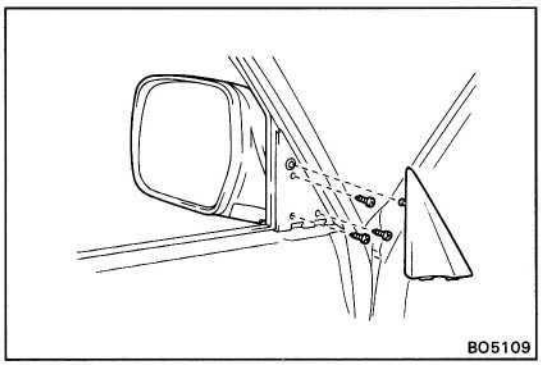

20. INSTALL REAR VIEW MIRROR

(a) (w/ Remote Control Mirror)
Connect the connector to the mirror.

(b) Install the rear view mirror with three screws.

(c) Install the cover.

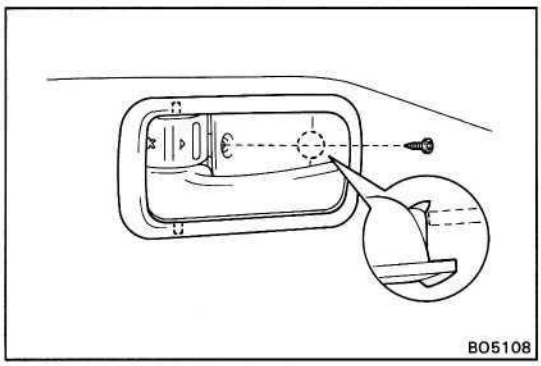

21. INSTALL DOOR INSIDE HANDLE BEZEL

(a) Push in the bezel to install it.

(b) Install the screw.

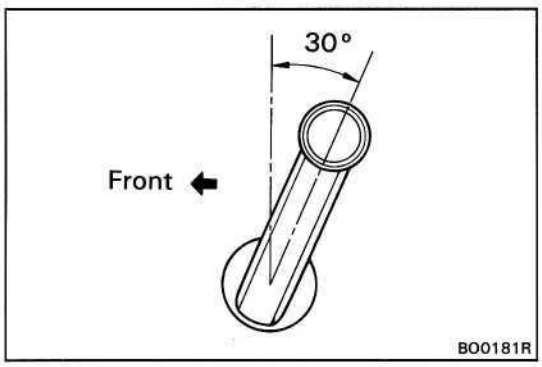

22. (w/o Power Window)
INSTALL REGULATOR HANDLE

With door window fully closed, install the plate and the regulator handle with snap ring as shown.

REAR DOOR

COMPONENTS

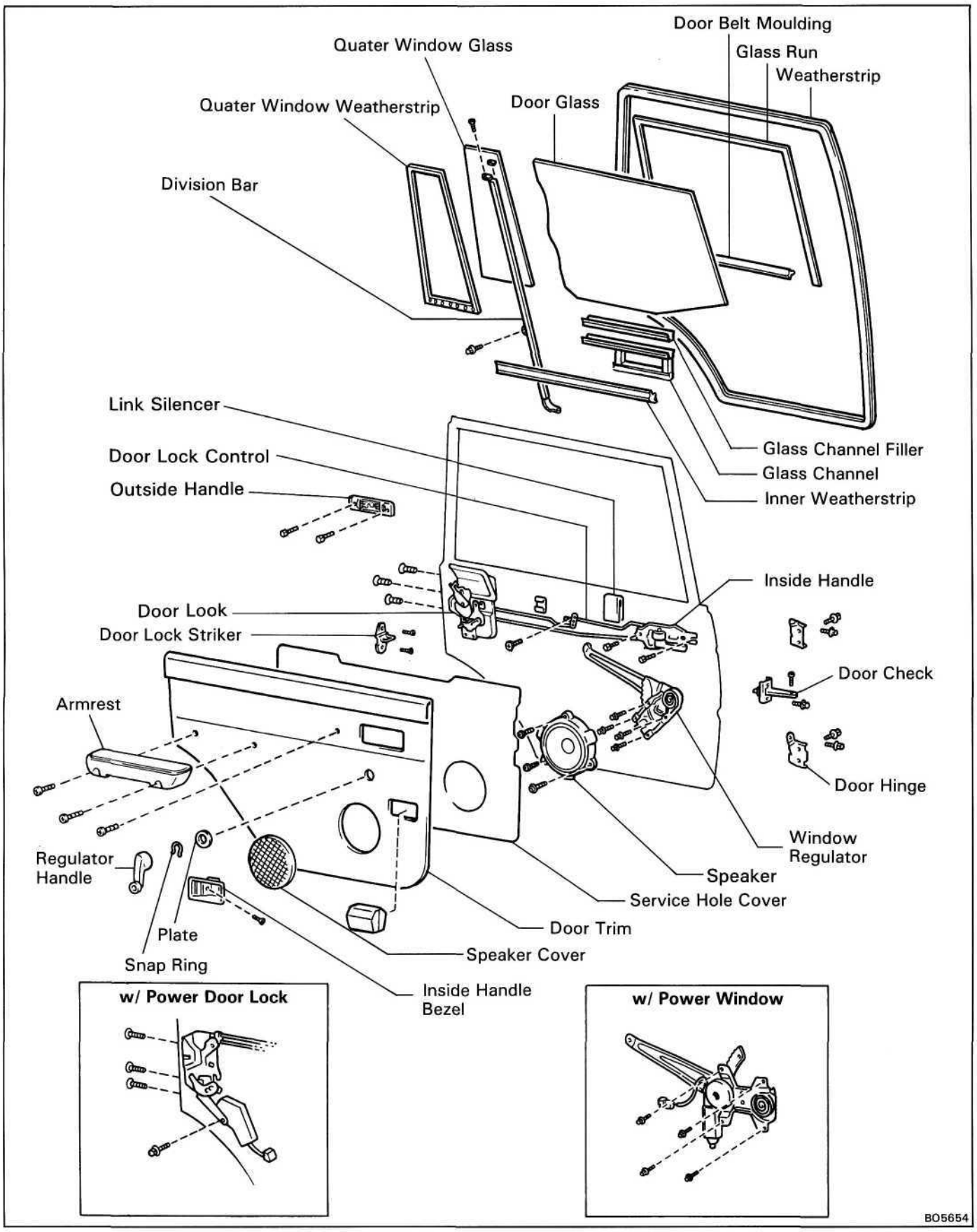

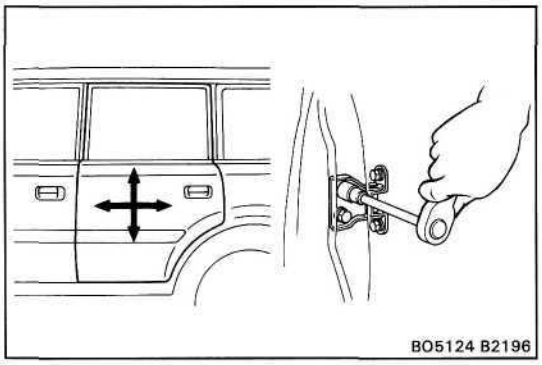

ADJUSTMENT OF REAR DOOR

1. ADJUST DOOR IN FORWARD/REARWARD AND VERTICAL DIRECTIONS

Adjust the door by loosening the body side hinge bolts.

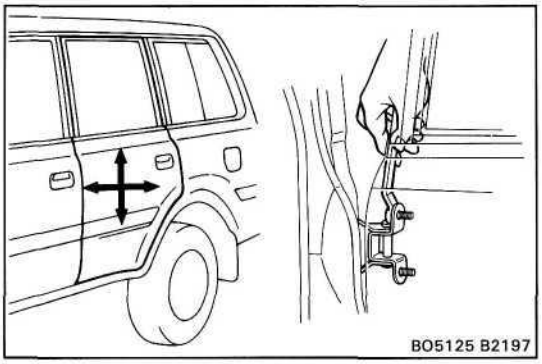

2. ADJUST DOOR IN LEFT/RIGHT AND VERTICAL DIRECTIONS

Adjust the door by loosening the door side hinge bolts.

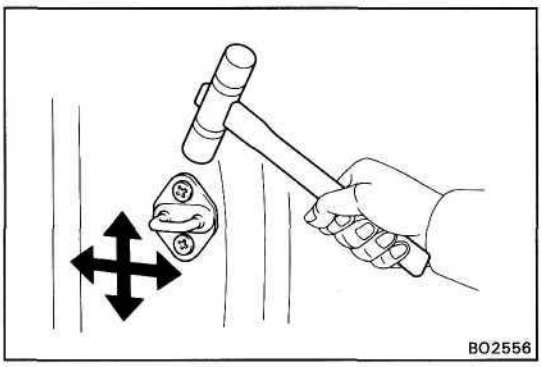

3. ADJUST DOOR LOCK STRIKER

(a) Check that the door fit and door lock linkages are adjusted correctly.

(b) Adjust the striker position by slightly loosening the striker mounting screws, and hitting the striker with a hammer. Tighten the striker mounting screws again.

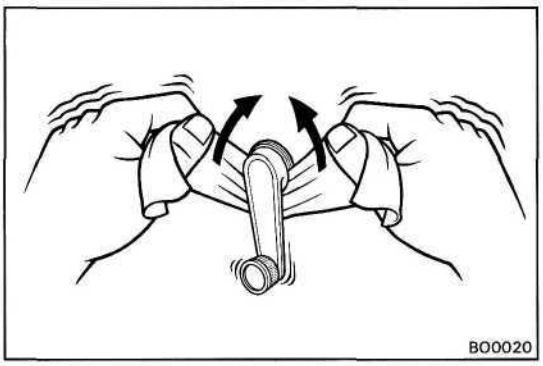

DISASSEMBLY OF REAR DOOR

1. (w/o Power Window)
REMOVE REGULATOR HANDLE

Pull off the snap ring with shop rag and remove the regulator handle and plate.

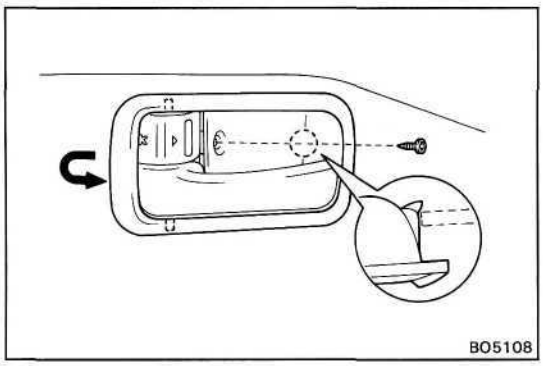

2. REMOVE DOOR INSIDE HANDLE BEZEL

Remove the screw and pull the inside handle bezel.

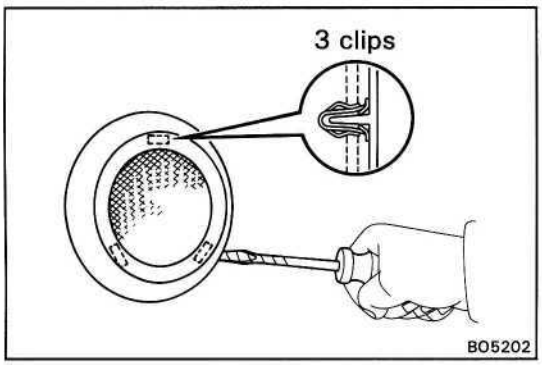

3. (w/ Speaker)
REMOVE SPEAKER COVER

Insert the screwdriver between the door trim and the speaker cover.

HINT: Tape the screw driver tip before use.

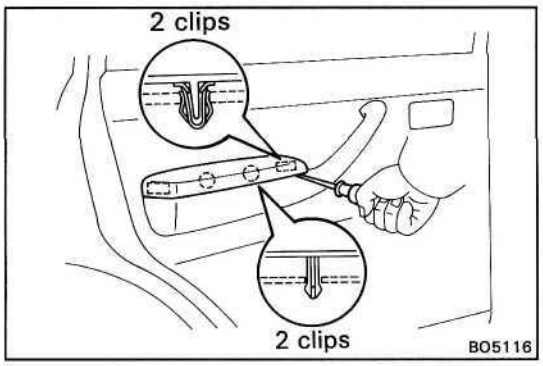

4. REMOVE ARMREST PANEL BASE

(a) Insert the screwdriver between the armrest and the armrest panel base to pry out.

HINT: Tape the screwdriver tip before use.

(b) Remove the armrest.

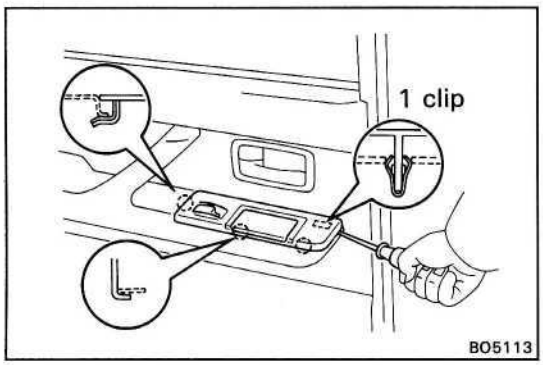

5. (w/ Power Window)
REMOVE ARMREST PANEL BASE UPPER

(a) Remove the ash tray.

(b) Insert the screwdriver between the armrest panel base and the armrest panel base upper to pry out, then disconnect the connector.

HINT: Tape the screwdriver tip before use.

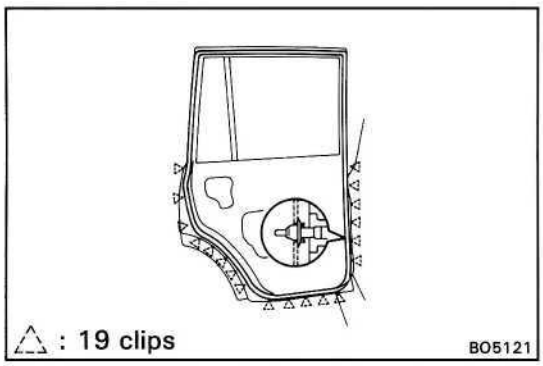

6. REMOVE DOOR WEATHERSTRIP

While pulling the weatherstrip by hand, remove nineteen clips using a clip remover.

HINT: Do not pull strongly on the weatherstrip as it may tear.

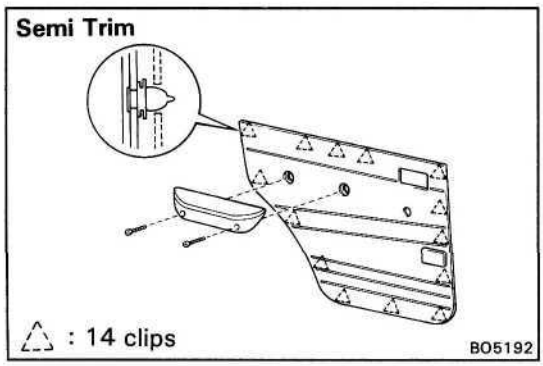

7. REMOVE DOOR TRIM

(a) (Semi Trim)
Remove two screws and arm rest.

(Full Trim)
Remove three screws from the inner door panel.

(b) (Semi Trim)
Insert the screwdriver between the trim and the panel to pry out.

HINT: Tape the screwdriver tip before use.

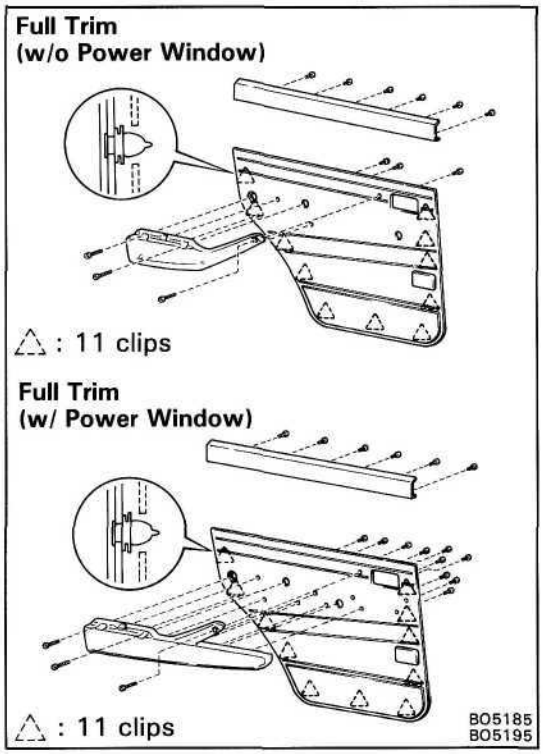

(Full Trim)
Insert the screwdriver between the trim and the panel to pry out, then the trim by pull it upward.

(c) (Full Trim)
Remove the inner weatherstrip from the door trim.

(d) (Full Trim, w/o Power Window)
Remove three screws and the armrest panel base from the door trim.

(Full Trim, w/ Power Window)
Remove ten screws and the armrest panel base from the door trim.

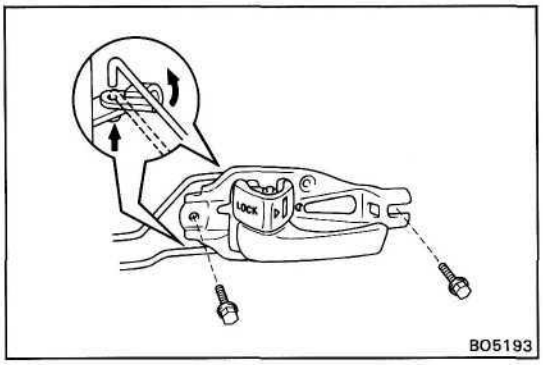

8. REMOVE DOOR INSIDE HANDLE

(a) Remove two bolts.

(b) Disconnect two links from the inside handle.

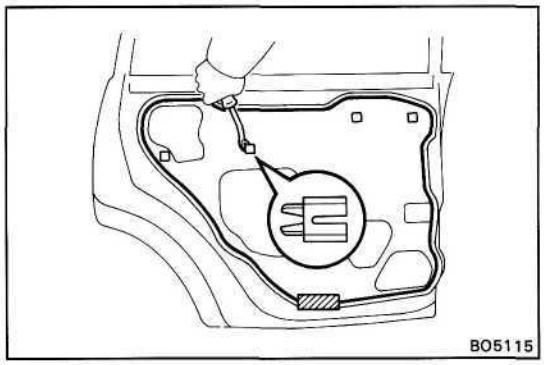

9. REMOVE SERVICE HOLE COVER

(a) (Semi Trim)
Using the clip remover, remove four screw grommets.

(Full Trim)
Using the clip remover, remove five screw grommets.

(b) Remove service hole cover.

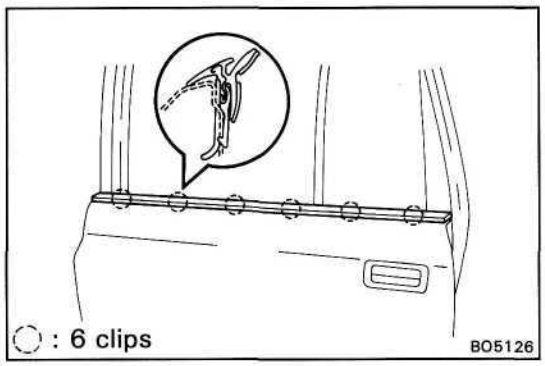

10. REMOVE DOOR BELT MOULDING

Pry out the clips from the edge of the panel, and remove the moulding.

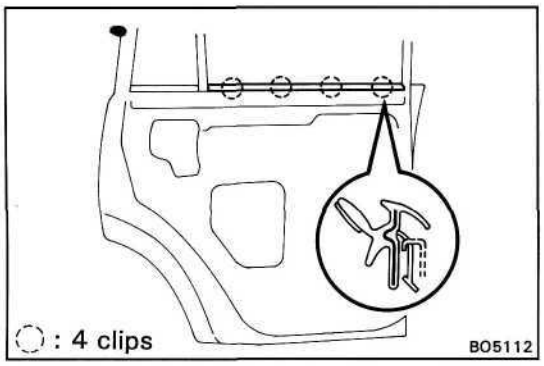

11. (Semi Trim)
REMOVE INNER WEATHERSTRIP

Pry out the clips from the edge of the panel, and remove the inner weatherstrip.

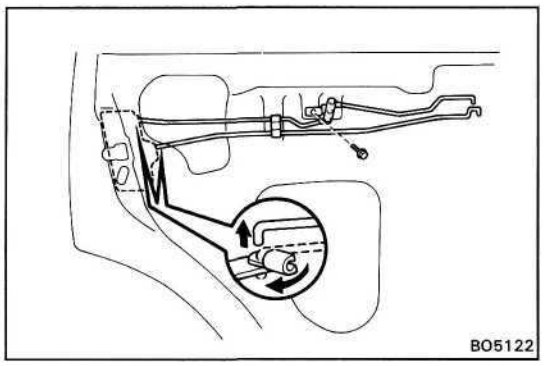

12. REMOVE LOCKING LINK AND DOOR OPENING LINK

Remove the bolt and disconnect two links.

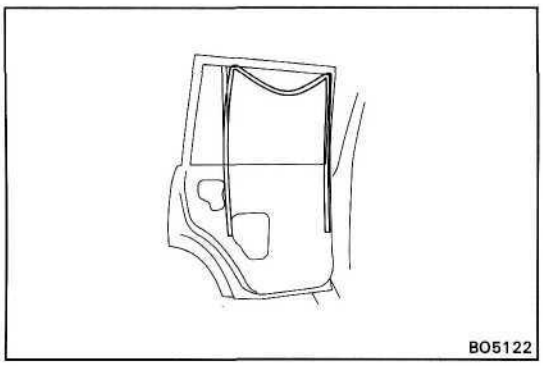

13. REMOVE DOOR GLASS RUN

Pull out the glass run from the door frame.

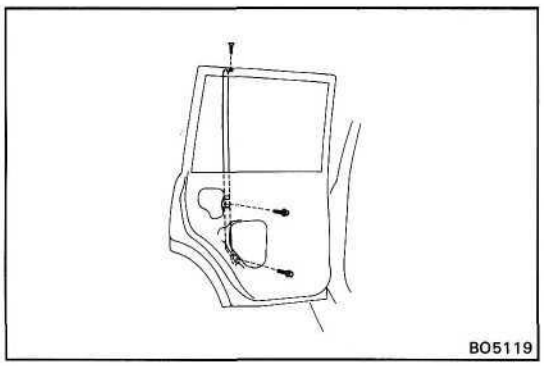

14. **REMOVE** DEVISION **BAR**

(a) Remove the screw from the door frame.

(b) Remove two bolts from the door panel.

(c) Pull out the devision bar from the door panel.

15. REMOVE QUARTER WINDOW GLASS WITH WEATHER-STRIP

Remove the quarter window glass together with the weatherstrip by pulling it forward.

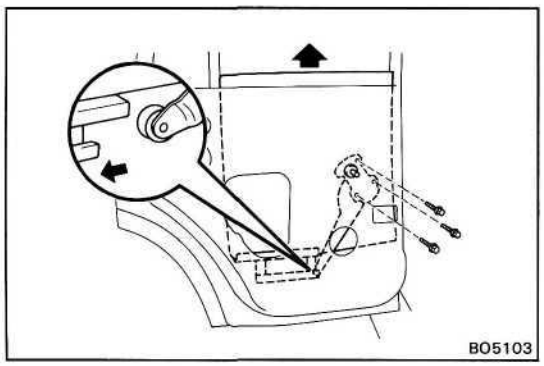

16. REMOVE DOOR GLASS

Remove the door glass by pulling it upward.

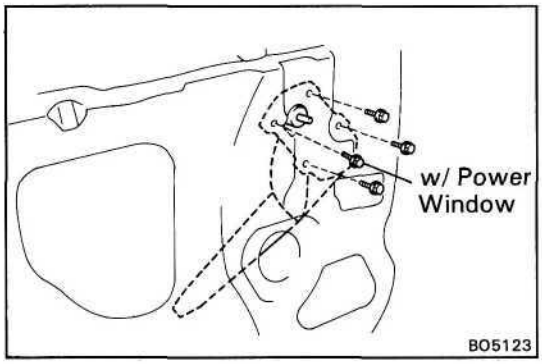

17. REMOVE WINDOW REGULATOR

(a) (w/ Power Window)
Disconnect the connector.

(b) (w/ Power Window)
Remove four regulator mounting bolts.

(w/o Power Window)
Remove three regulator mounting bolts.

(c) Remove the regulator through the service hole.

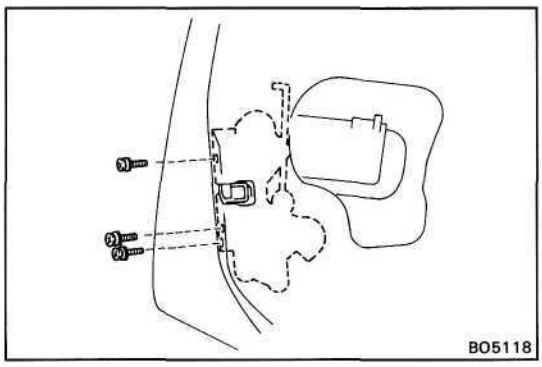

18. REMOVE DOOR LOCK

(a) Remove the link from outside handle.

(b) (w/ Power Door Lock)
Disconnect the connectors.

(c) Remove three screws and the door lock.

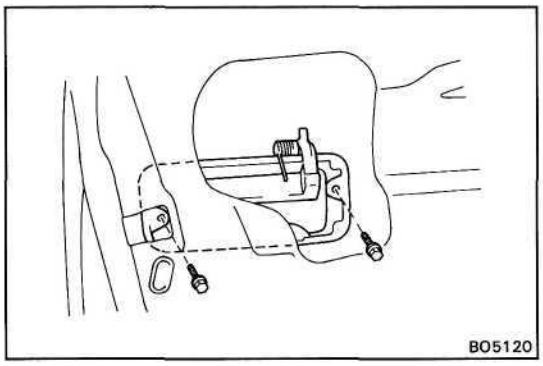

19. REMOVE OUTSIDE HANDLE

Remove two bolts and the outside handle.

20. (w/ Speaker)
REMOVE SPEAKER

Remove three screws and speaker, then disconnect the connector.

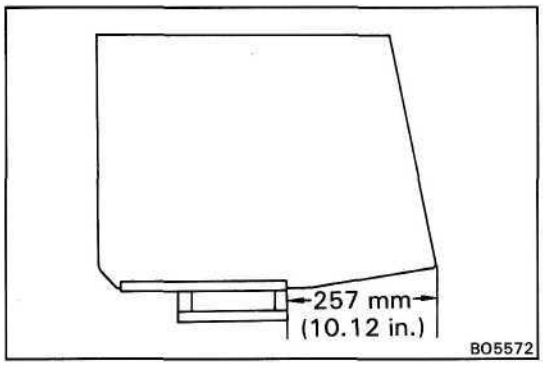

REPLACEMENT OF GLASS

1. REMOVE GLASS CHANNEL WITH SCREWDRIVER OR LIKE OBJECT

2. APPLY SOAPY WATER TO INSIDE OF WEATHERSTRIP

3. INSTALL CHANNEL BY TAPPING IT WITH PLASTIC HAMMER

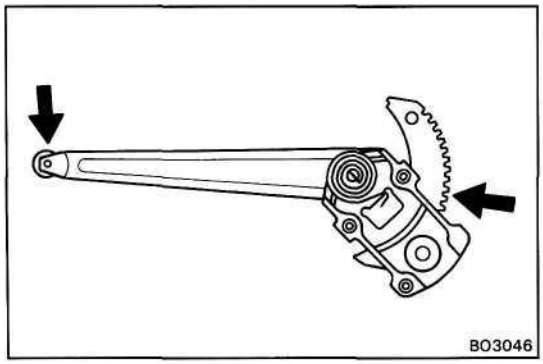

ASSEMBLY OF REAR DOOR

(See page BO-18)

1. BEFORE INSTALLING PARTS COAT THEM WITH MP GREASE

(a) Apply MP grease to the sliding surface and gears of the window regulator.

NOTICE: Do not apply MP grease to the spring of the window regulator.

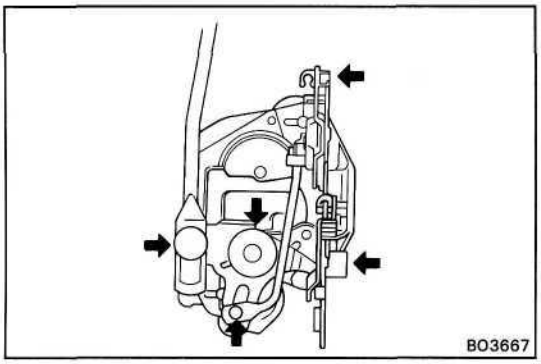

(b) Apply MP grease to the sliding surface of the door lock.

2. (w/ Speaker)
INSTALL SPEAKER

Connect the connector and install speaker with three screws.

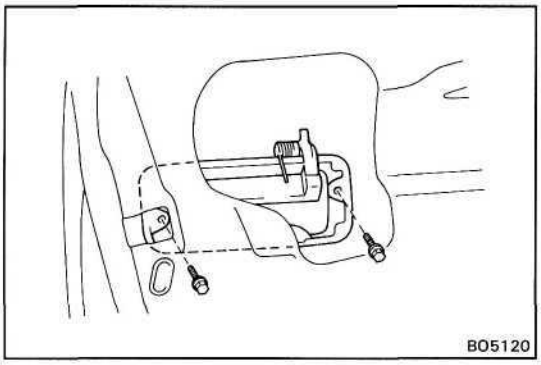

3. INSTALL OUTSIDE HANDLE

Install outside handle with two bolts.

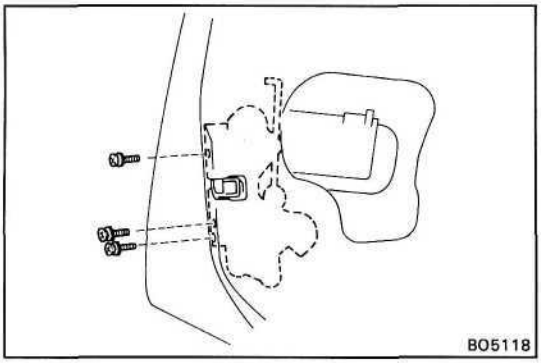

4. INSTALL DOOR LOCK

(a) Install the door lock with three screws.

(b) (w/ Power Door Lock)
Connect the connector.

(c) Connect the link to the outside handle.

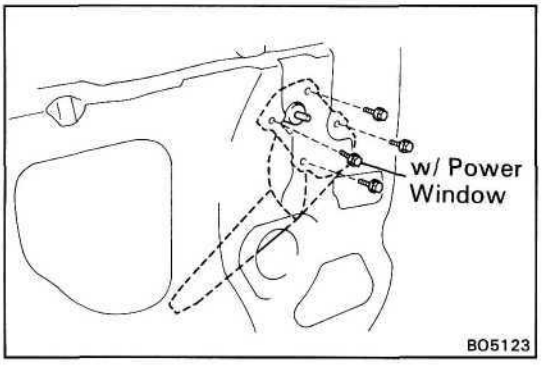

5. INSTALL WINDOW REGULATOR

(a) Place the regulator through the service hole.

(b) (w/ Power Window)
Install four regulator mounting bolts.
(w/o Power Window)
Install three regulator mounting bolts.

(c) (w/ Power Window)
Connect the connector.

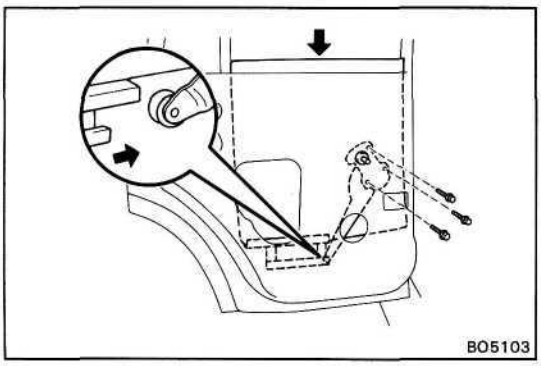

6. INSTALL DOOR GLASS

(a) Place the glass in the door cavity.

(b) Attach the glass to the window regulator arm.

7. INSTALL QUARTER WINDOW GLASS WITH WEATHER-STRIP

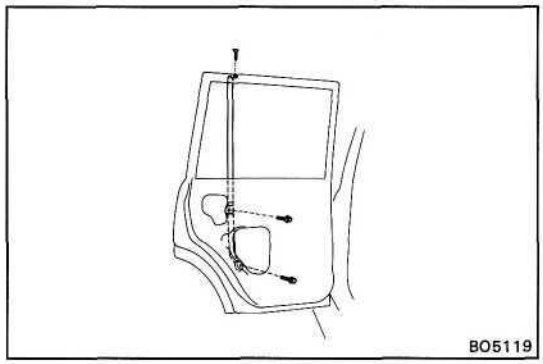

8. INSTALL DIVISION BAR

Install division bar with the screw and two bolts.

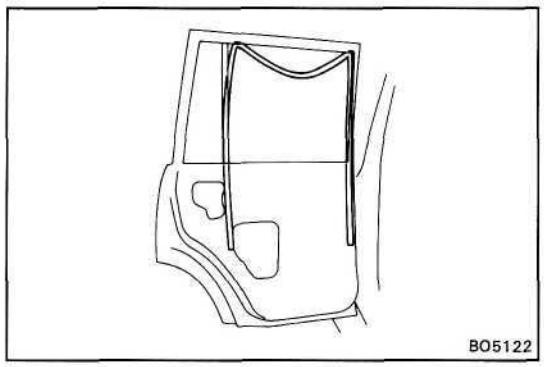

9. INSTALL DOOR GLASS RUN

Install the glass run to the door frame.

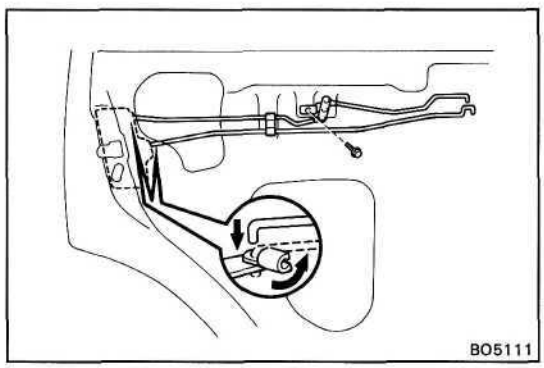

10. INSTALL LOCKING LINK AND DOOR OPENING LINK

Connect two links and install the bolt.

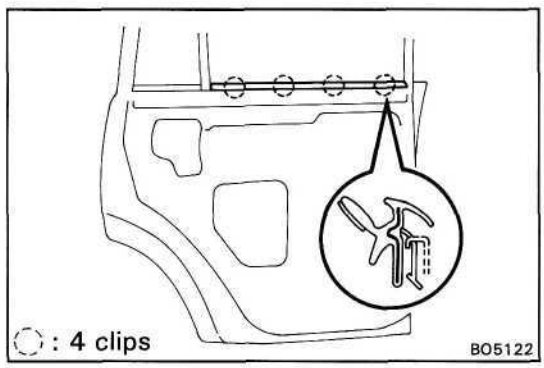

11. (Semi Trim)
INSTALL INNER WEATHERSTRIP

Insert the claw of the clips into the upper panel slit and push the weatherstrip onto the panel.

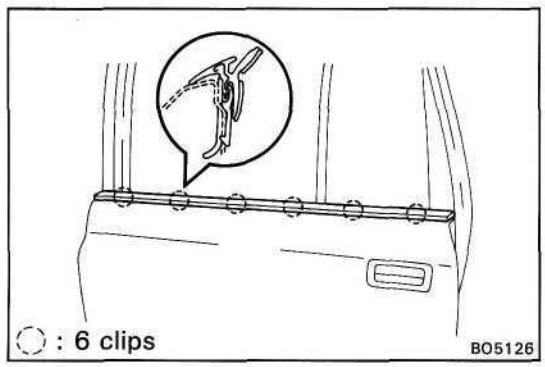

12. INSTALL DOOR BELT MOULDING

Insert the claw of the clips into the upper panel slit and push the moulding onto the panel.

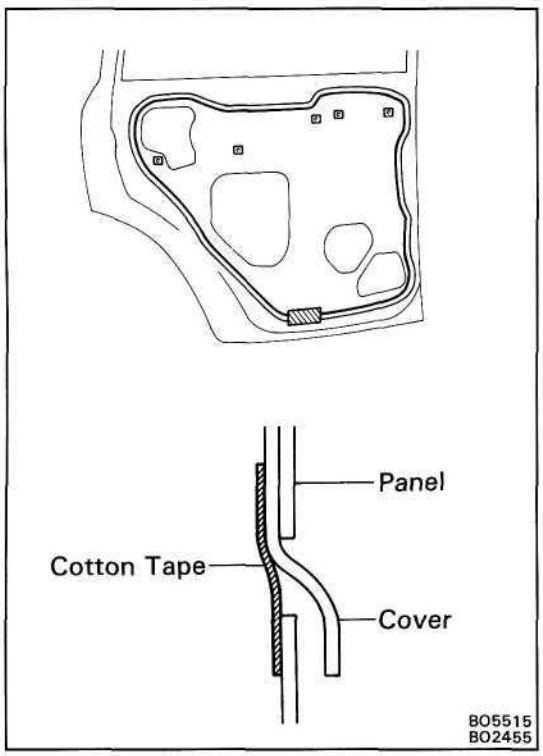

13. INSTALL SERVICE HOLE COVER

(a) Seal the service hole cover with adhesive.

HINT: Bring out the link through the service hole cover.

(b) Insert the lower edge of the service hole cover into the panel slit.

(c) Seal the panel slit with the cotton tape.

NOTICE: Do not block the trim clip sealing with the tape.

(d) Install five screw grommets.

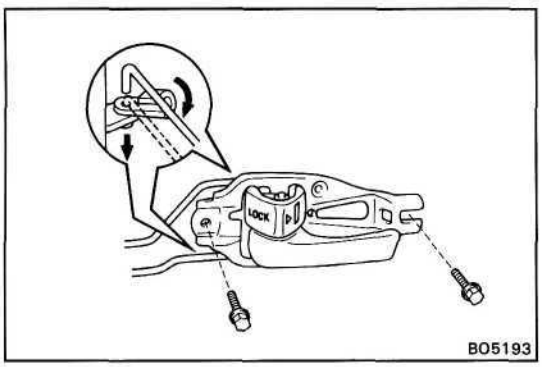

14. INSTALL DOOR INSIDE HANDLE

Connect two links to the inside handle and install two bolts.

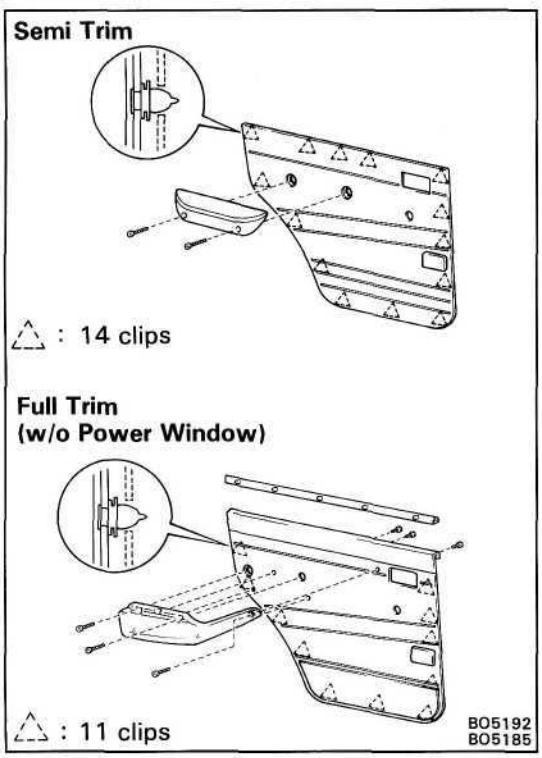

15. INSTALL DOOR TRIM

(a) (Full Trim, w/o Power Window)
Install the armrest panel base with three screws to the door trim.

(Full Trim, w/ Power Window)
Install the armrest panel base with eleven screws to the door trim.

(b) (Full Trim)
Install the inner weatherstrip to the door trim.

(c) (Semi Trim)
Install the door trim with clips to the inside door panel by tapping.

(Full Trim)
Insert the upper edge of the trim from above, tap the trim by hand and fix it in place with the retainers.

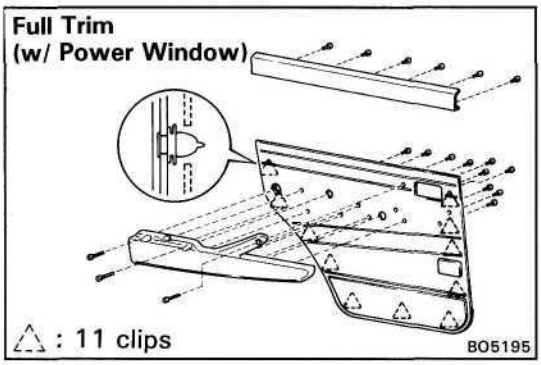

(d) (Semi Trim)
Install the armrest with two screws to the door panel.

(Full Trim)
Install the armrest with three screws to the door panel.

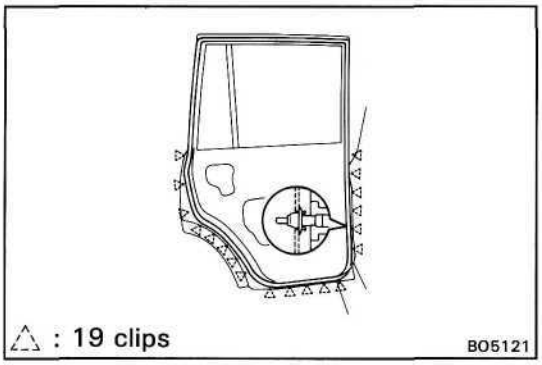

16. INSTALL DOOR WEATHERSTRIP

Install the weatherstrip with clips to the panel.

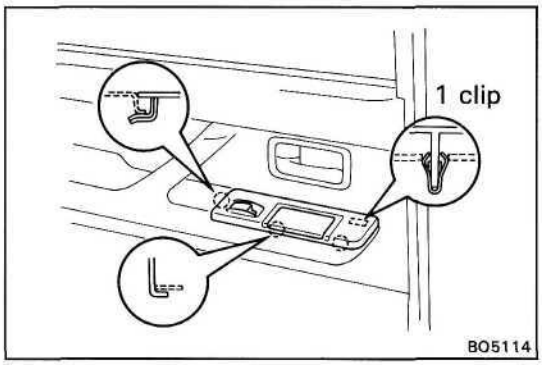

17. (w/ Power Window)
INSTALL ARMREST PANEL BASE UPPER

(a) Connect the connector and install the armrest panel base upper.

(b) Install the ash tray.

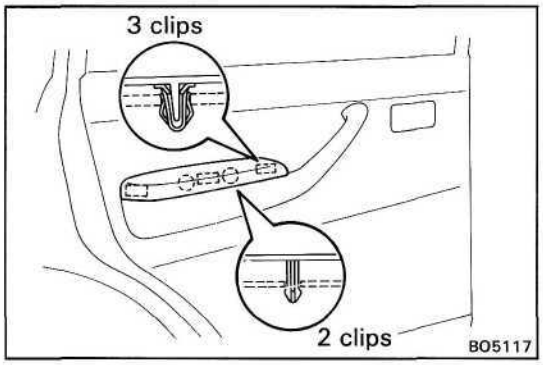

18. INSTALL ARMREST

Install the armrest to the armrest panel base by tapping.

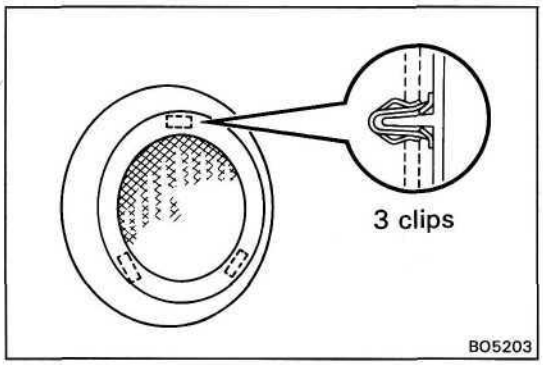

19. (w/Speaker)
INSTALL SPEAKER COVER

Install the speaker cover to the door panel.

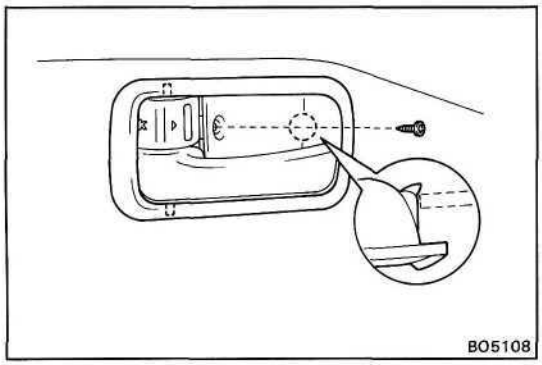

20. INSTALL DOOR INSIDE HANDLE BEZEL

(a) Push in the bezel to install it.

(b) Install the screw.

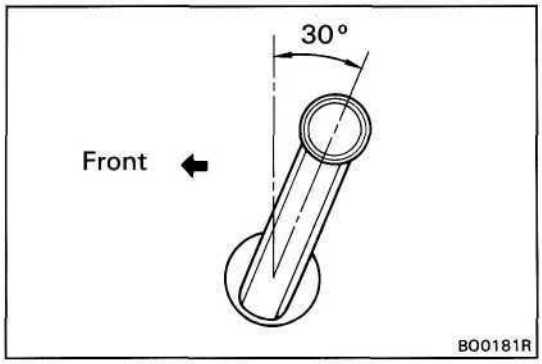

21. (w/o Power Window)
INSTALL REGULATOR HANDLE

With door window fully closed, install the plate and regulator handle with the snap ring as shown.

BACK DOOR (Lift-up Type)

COMPONENTS

Damper Stay
Door Lock Control
Out Side Handle
Door Inside Handle
Door Trim
Pull Handle Bezel
Pull Handle
Clip
Lock Cylinder
Weatherstrip
Weatherstrip Upper
Door Trim
Service Hole Cover
Door Hinge
Wiper Arm
Door Lock
Wiper Control Relay
Wiper Motor
Door Lock Control
License Plate Light Cover
Door Lock Striker
Rear Fog Light
Door Lock
w/ Power Door Lock
BO5616

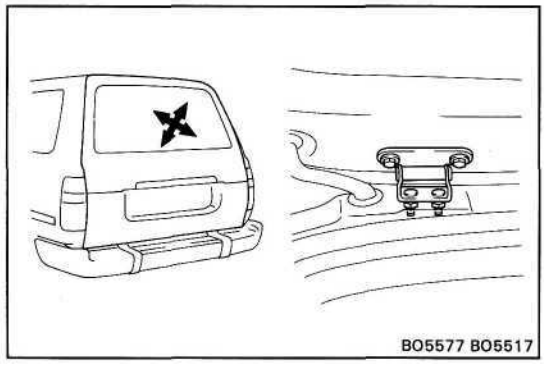

Upper Back Door

ADJUSTMENT OF UPPER BACK DOOR

1. ADJUST DOOR IN FORWARD/REARWARD AND LEFT/RIGHT DIRECTIONS

Adjust the door by loosening the door side hinge nuts.

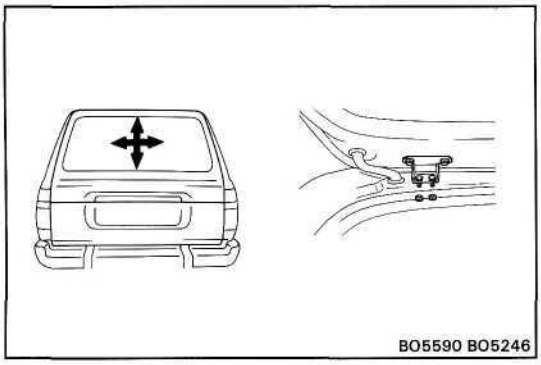

2. ADJUST DOOR IN LEFT/RIGHT AND VERTICAL DIRECTIONS

Adjust the door by loosening the body side hinge bolts.

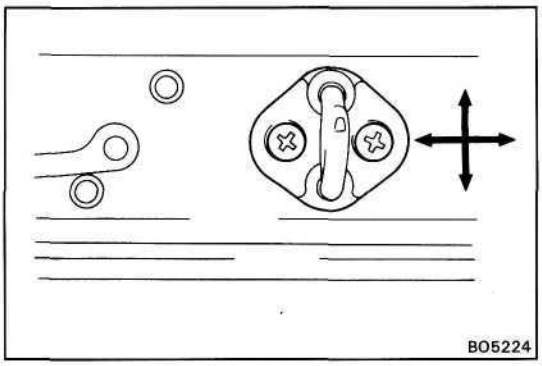

3. ADJUST DOOR LOCK STRIKER

(a) Check that the door fit and door lock linkages are adjusted correctly.

(b) Adjust the striker position by slightly loosening the striker mounting screws, and hitting the striker with a hammer. Tighten the striker mounting screw again.

DISASSEMBLY OF UPPER BACK DOOR

(See page BO-29)

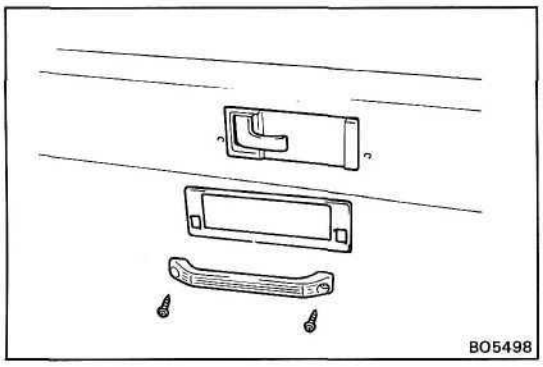

1. REMOVE PULL HANDLE AND PULL HANDLE BEZEL

Remove two screws and pull handle, then remove the bezel.

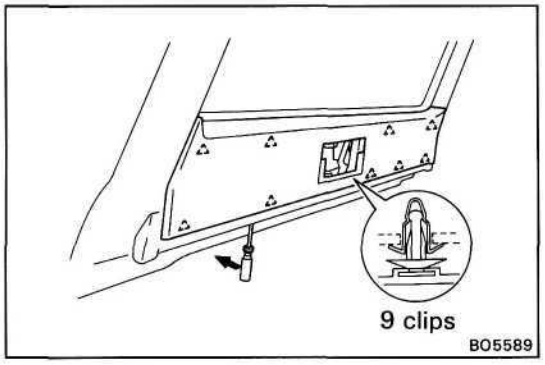

2. REMOVE DOOR TRIM

(a) Insert a screwdriver, between the retainers and the door trim to pry it loose.

HINT: Tape the screwdriver tip before use.

(b) Remove the door trim.

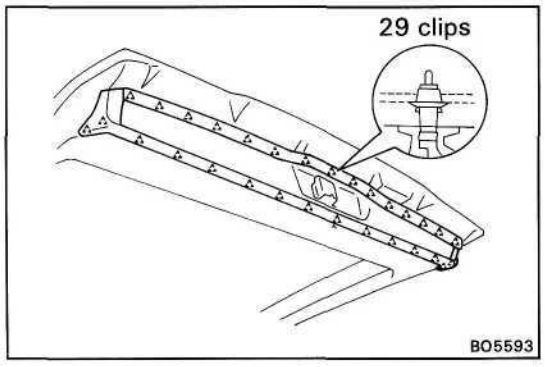

3. REMOVE DOOR WEATHERSTRIP AND WEATHERSTRIP UPPER

While pulling the weatherstrips by hand, remove the clips using the dip remover.

HINT: Do not pull strongly on the weatherstrips as it may tear.

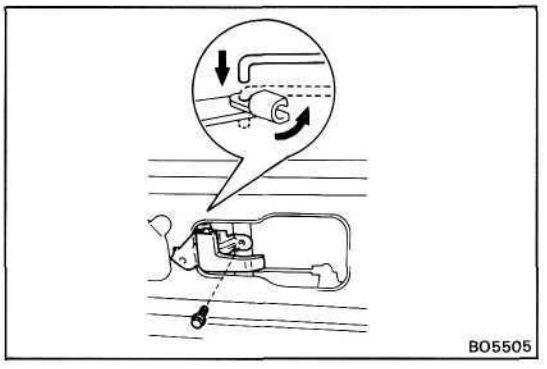

4. REMOVE DOOR INSIDE HANDLE

Remove a bolt and the handle, then disconnect the link.

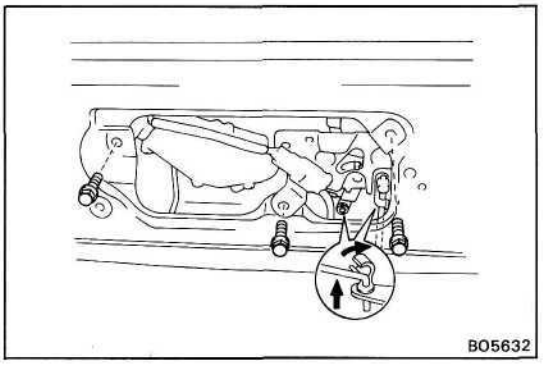

5. REMOVE DOOR LOCK CONTROL

(w/o Power Door Lock)
Remove two bolts and the lock control, then disconnect three links.

(w/ Power Door Lock)
Remove three bolts and the lock control, then disconnect three links and the connector.

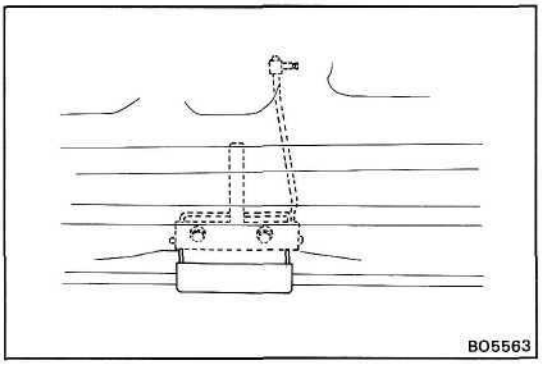

6. REMOVE OUTSIDE HANDLE

Remove two bolts, the handle and the outside handle.

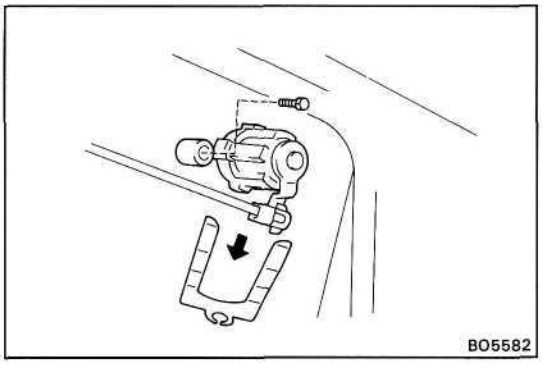

7. REMOVE DOOR LOCK CYLINDER

(a) Disconnect the link from the cylinder.

(b) Remove the clip and the bolt from the cylinder.

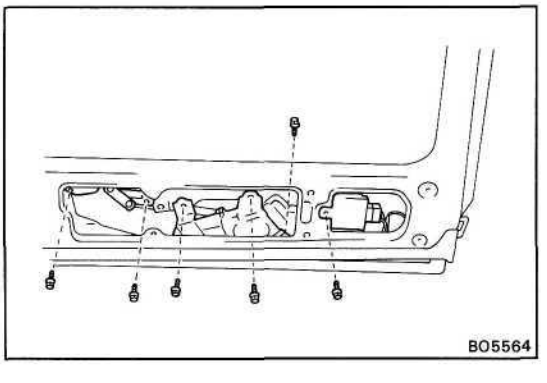

8. (w/ Rear Wiper)
REMOVE WIPER ARM, MOTOR AND RELAY

(a) Open the cap, then remove the nut and the wiper arm.

(b) Remove five bolts and the motor, then disconnect the connector.

(c) Remove a bolt and the wiper relay, then disconnect the connector.

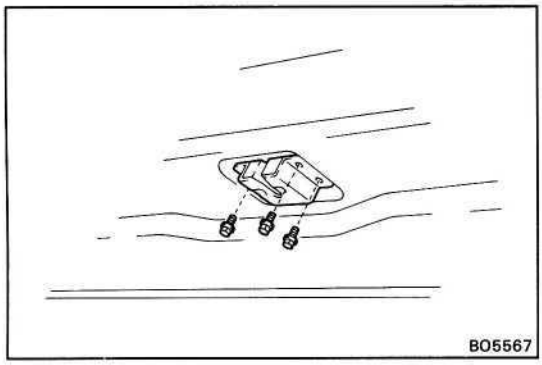

9. REMOVE DOOR LOCK

Remove three bolts and the door lock, then disconnect the connector.

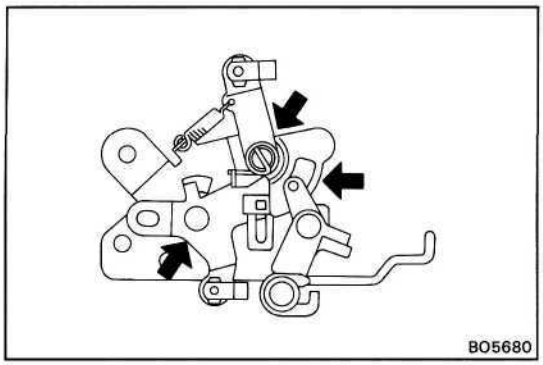

ASSEMBLY OF UPPER BACK DOOR

(See page-29)

1. APPLY MP GREASE TO LOCK CONTROL

Apply MP grease to the sliding surface of the lock control.

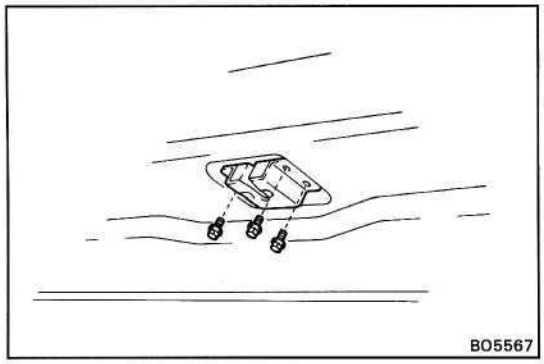

2. INSTALL DOOR LOCK

Install the door lock with three bolts, then connect the connector.

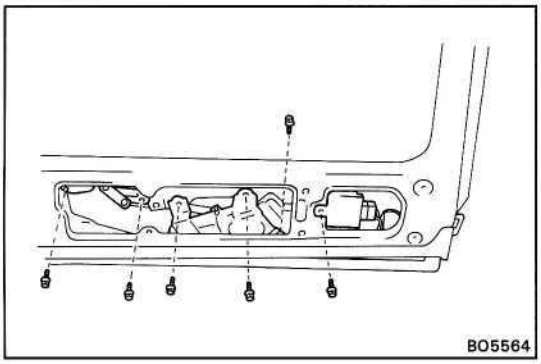

3. (w/ Rear Wiper)
INSTALL WIPER ARM, MOTOR AND REAR WIPER CONTROL RELAY

(a) Connect the connector, then install the wiper control relay with the bolt.

(b) Connect the connector.

(c) Install the motor with five bolts.

(d) Install the wiper arm with the nut.

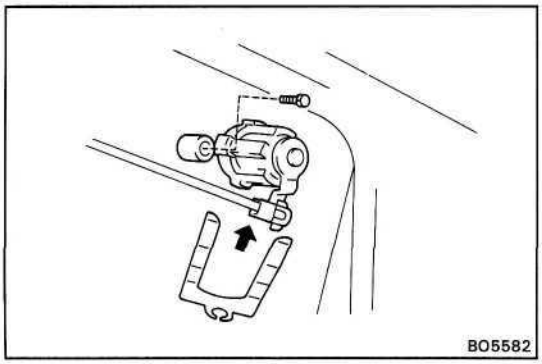

4. INSTALL DOOR LOCK CYLINDER

(a) Install the cylinder with the clip and the bolt.

(b) Connect the link to the cylinder.

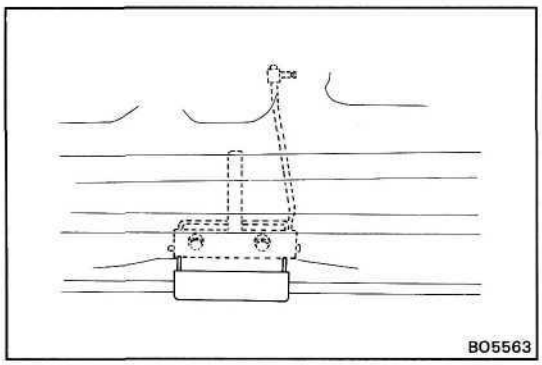

5. INSTALL OUTSIDE HANDLE

Install the outside handle and the handle with two bolts.

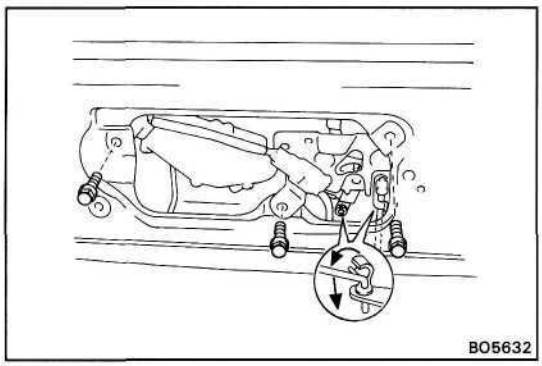

6. INSTALL DOOR LOCK CONTROL

(w/o Power Door Lock)
Install the lock control with two bolts, then connect three links.

(w/ Power Door Lock)
Install the lock control with three bolts, then connect three links and the connector.

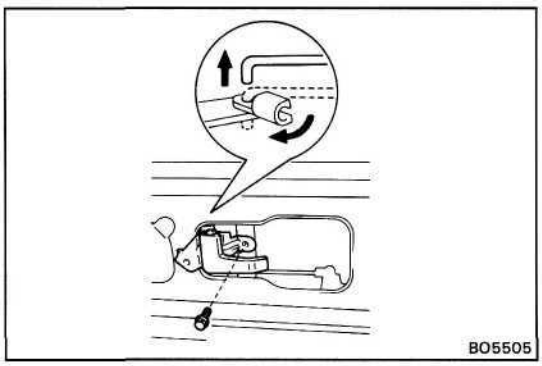

7. INSTALL DOOR INSIDE HANDLE

(a) Connect the link.

(b) Install the handle with the bolt.

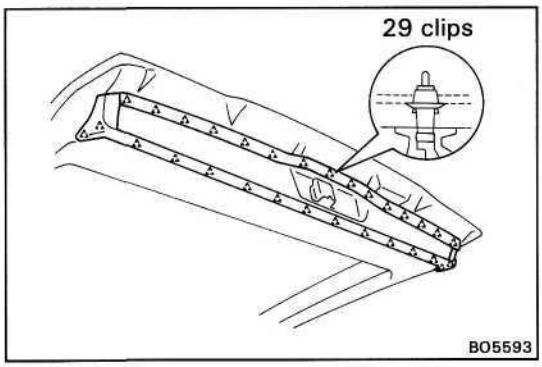

8. INSTALL DOOR WEATHERSTRIP AND WEATHERSTRIP UPPER

Install the weatherstrips with clips to the door.

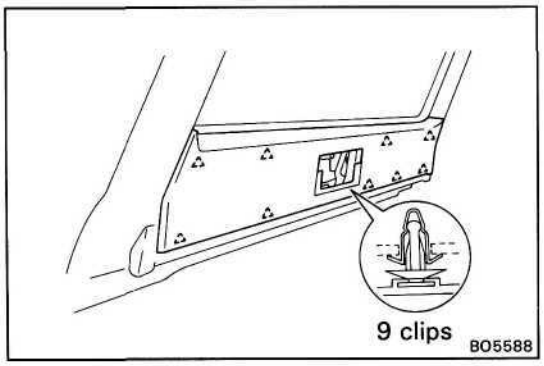

9. INSTALL DOOR TRIM

Install the door trim with retainers to the door panel by tapping.

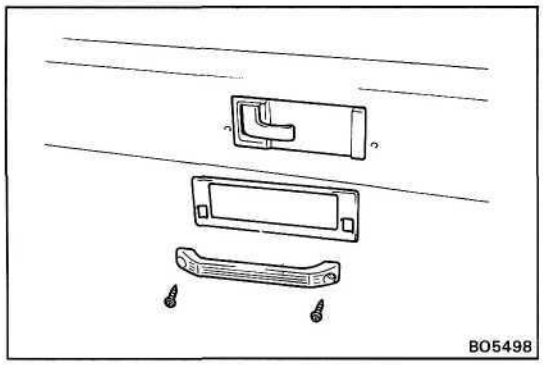

10: INSTALL PULL HANDLE AND PULL HANDLE BEZEL

Install the bezel and the pull handle with two screws.

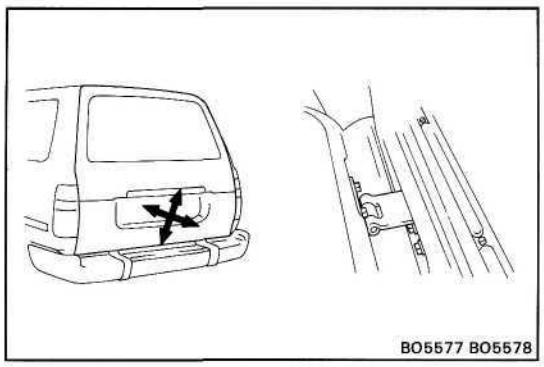

Lower Back Door

ADJUSTMENT OF LOWER BACK DOOR

1. ADJUST DOOR IN FORWARD/REARWARD AND LEFT/RIGHT DIRECTIONS

Adjust the door by loosening the door side hinge bolts.

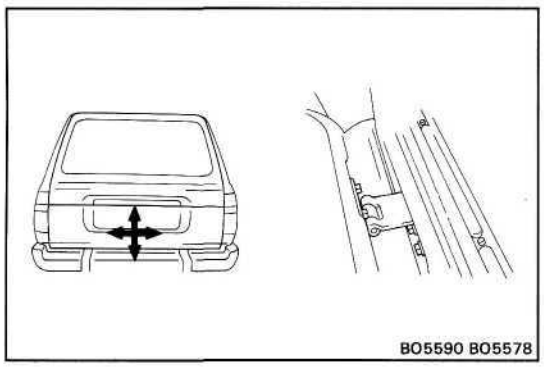

2. ADJUST DOOR IN LEFT/RIGHT AND VERTICAL DIRECTIONS

Adjust the door by loosening the body side hinge bolts.

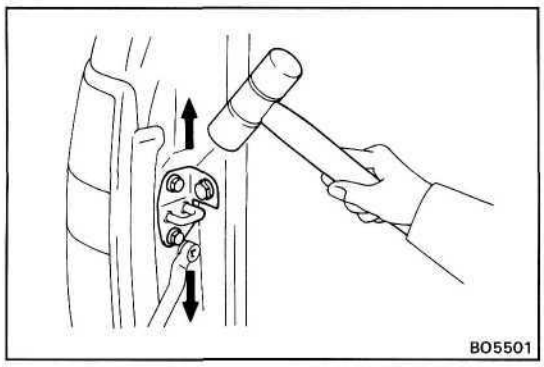

3. ADJUST DOOR LOCK STRIKER

(a) Check that the door fit and door lock linkages are adjusted correctly.

(b) Adjust the striker position by slightly loosening the striker mounting screws, and hitting the striker with a hammer.

(c) Tighten the striker mounting screws again.

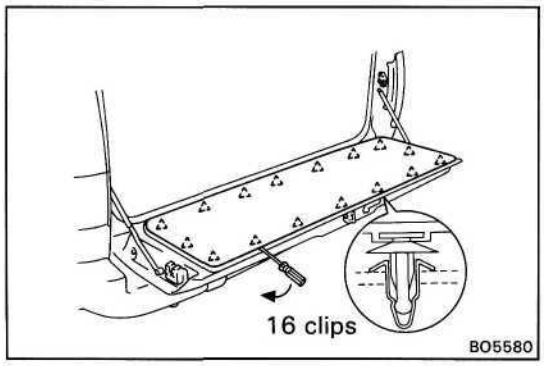

DISASSEMBLY OF BACK DOOR

(See page BO-29)

1. REMOVE DOOR TRIM

(a) Insert a screwdriver, between the retainers and the door trim to pry it loose.

HINT: Tape the screwdriver tip before use.

(b) Remove the door trim.

2. REMOVE SERVICE HOLE COVER

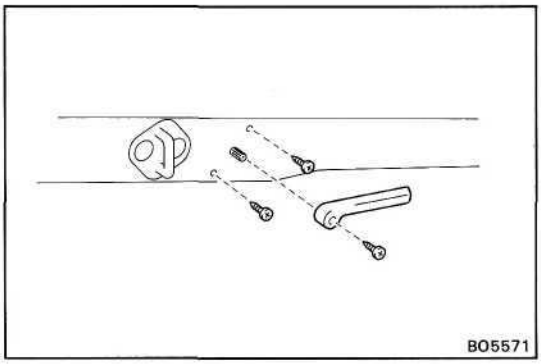

3. REMOVE DOOR LOCK CONTROL

(a) Disconnect two links from the door lock control.

(b) Remove the screw and the inside handle.

(c) Remove two screws, bush and the door lock control.

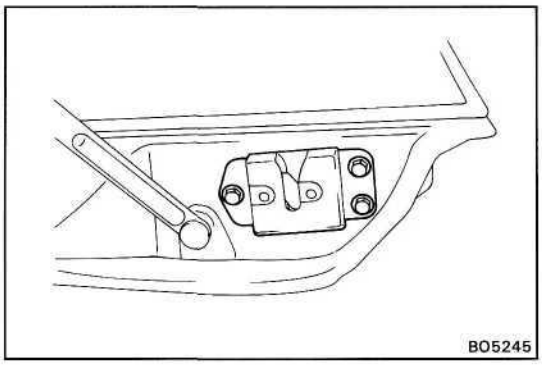

4. REMOVE DOOR LOCK

Remove three bolts and the door lock.

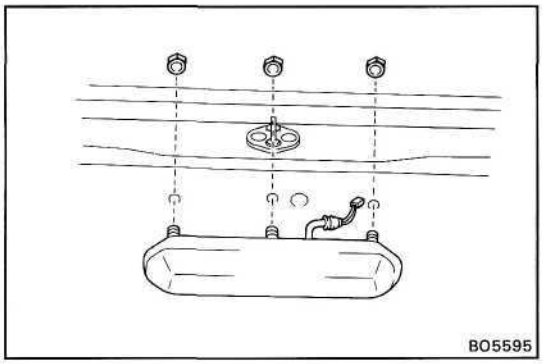

5. REMOVE LICENSE PLATE LIGHT COVER

Remove three nuts and the light cover, then disconnect the connector.

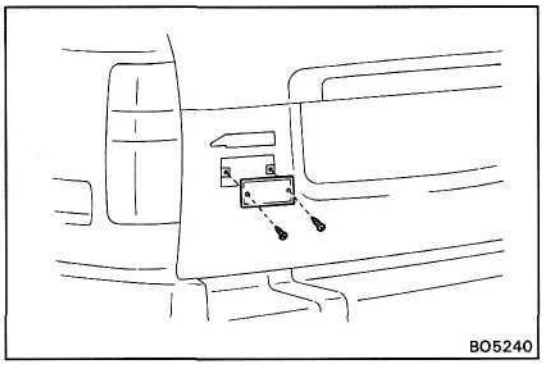

6. (w/ **Fog Light)**
REMOVE FOG LIGHT

Remove two screws and the fog light, then disconnect the connector.

ASSEMBLY OF LOWER BACK DOOR

(See page BO-29)

1. (w/ Fog Light)
INSTALL FOG LIGHT

Connect the connector and install the fog light with two screws.

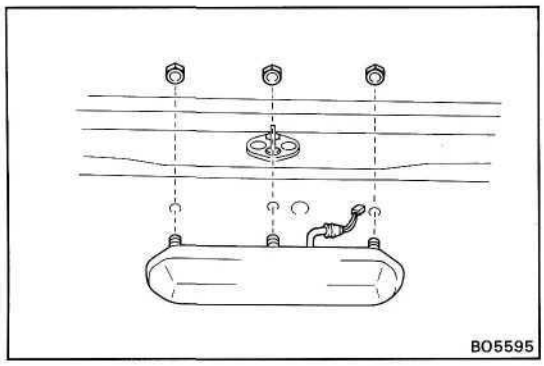

2. INSTALL LICENSE PLATE LIGHT COVER

Connect the connector and install the light cover with three nuts.

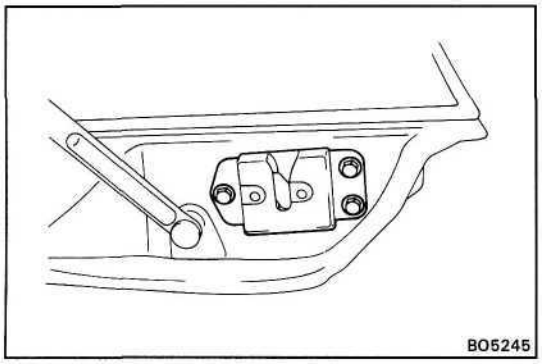

3. INSTALL DOOR LOCK

Install the door lock with three bolts.

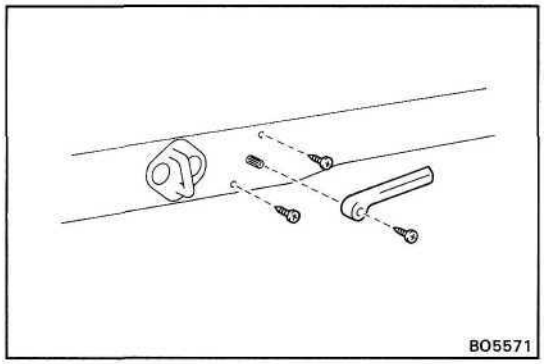

4. INSTALL DOOR LOCK CONTROL

(a) Install the bush and the door lock control with two screws.

(b) Install the inside handle with the screw.

(c) Connect two links to the door lock control.

5. INSTALL SERVICE HOLE COVER

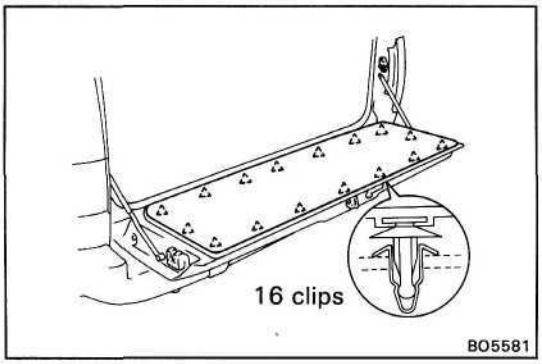

6. INSTALL DOOR TRIM

Install the door trim with clips to the inside door panel by tapping.

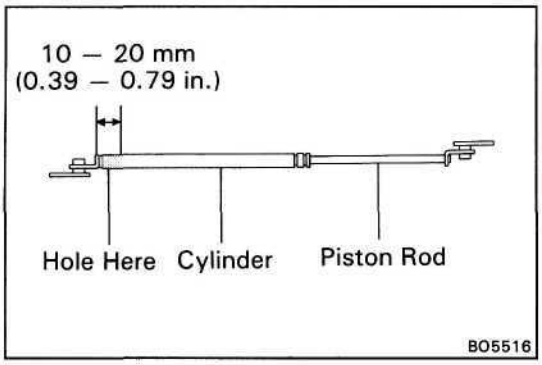

Back Door Damper Stay

NOTICE: Handling the damper.

(a) Do not disassemble the damper because the cylinder is filled with pressurized gas.

(b) If the damper is to be replaced, drill a 2.0 - 3.0 mm (0.079 - 0.118 in.) hole in the bottom of the removed damper cylinder to completely release the high-pressure gas before disposing of it.

(c) When drilling, chips may fly out so work carefully.

(d) The gas is colorless, odorless and non-toxic.

(e) When working, handle the damper carefully. Never score or scratch the exposed part of the piston rod, and never allow paint or oil to get on it.

(f) Do not turn the piston rod and cylinder with the damper fully extended.

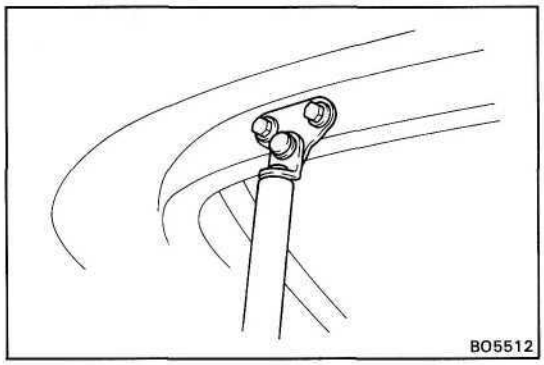

REMOVAL OF DAMPER STAY

REMOVE DAMPER STAY

(a) Remave two bolts and the damper stay upper end from back door.

(b) Remove two bolts and the damper stay lower end from body.

INSTALLATION OF DAMPER STAY

INSTALL DAMPER STAY

(a) Install damper stay upper end to back door with two bolts.

(b) Install damper stay lower end to body with two bolts.

BACK DOOR (Swing Out Type)

Right Back Door

COMPONENTS

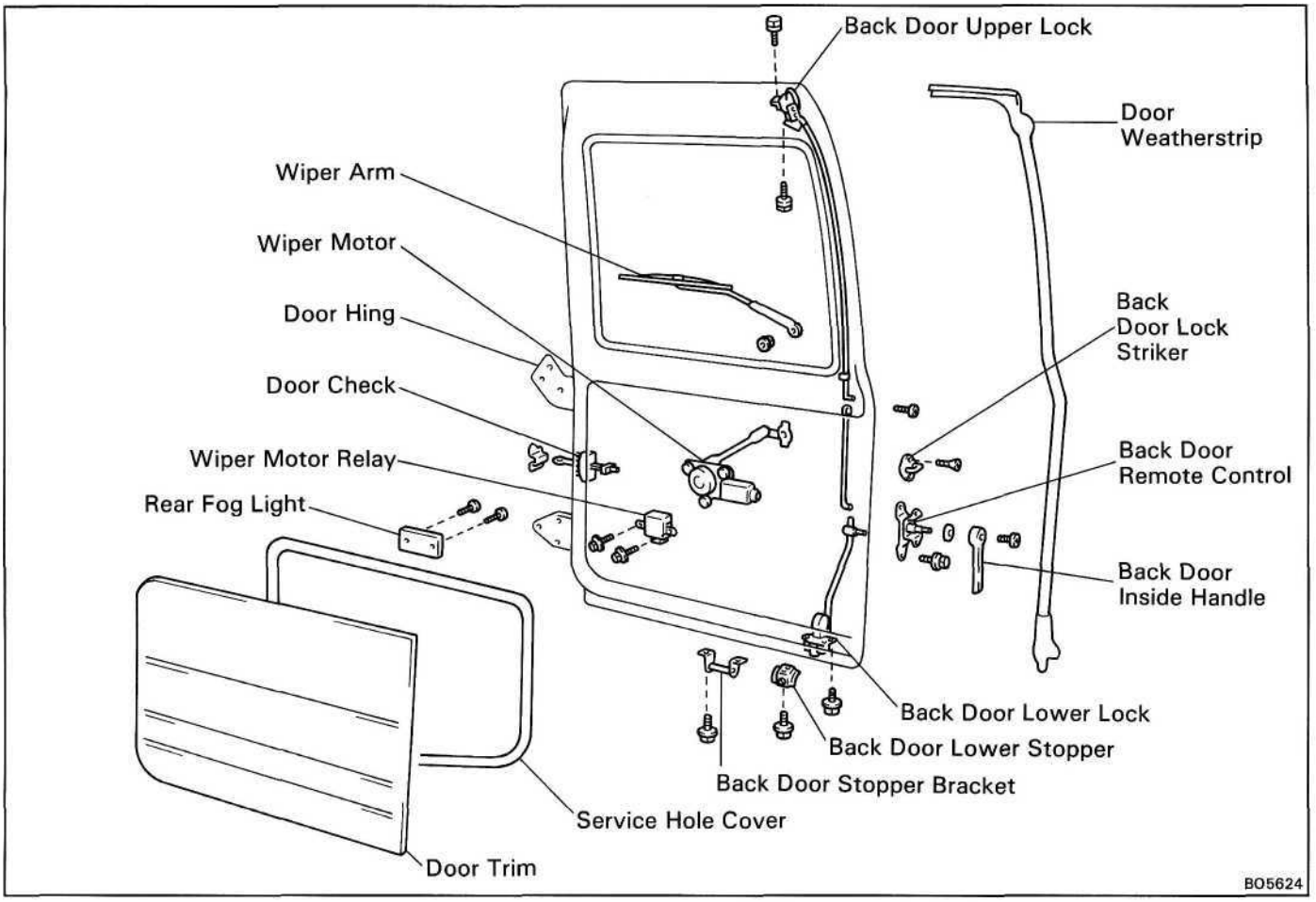

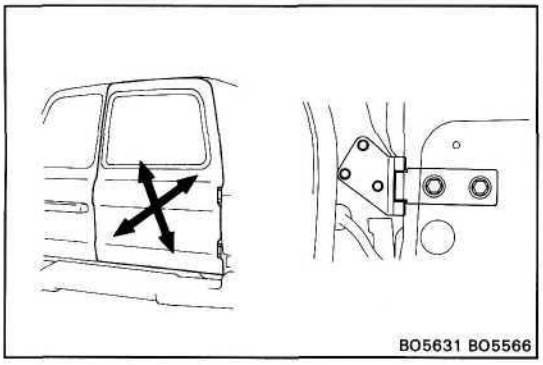

ADJUSTMENT OF RIGHT BACK DOOR

1. **ADJUST DOOR IN FORWARD/REARWARD AND VERTICAL DIRECTIONS**

   Adjust the door by loosening the body side hinge bolts.

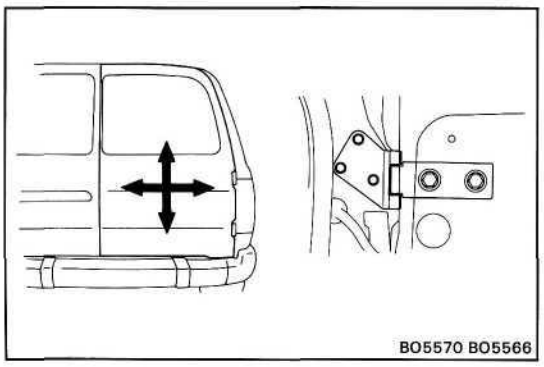

2. **ADJUST DOOR IN LEFT/RIGHT AND VERTICAL DIRECTIONS**

   Adjust the door by loosening the door side hinge bolts.

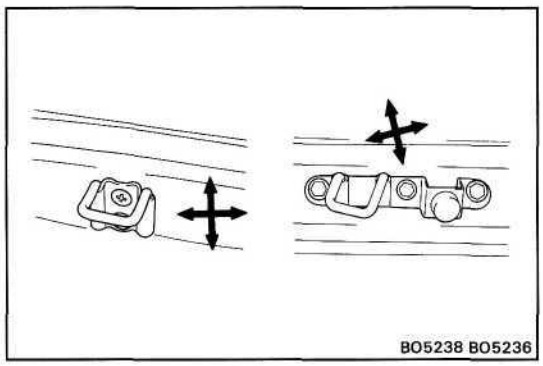

3. ADJUST DOOR LOCK STRIKER

(a) Check that the door fit and door lock linkages are adjusted correctly.

(b) Adjust the striker position by slightly loosening the striker mounting screws, and hitting the striker with a hammer. Tighten the striker mounting screws again.

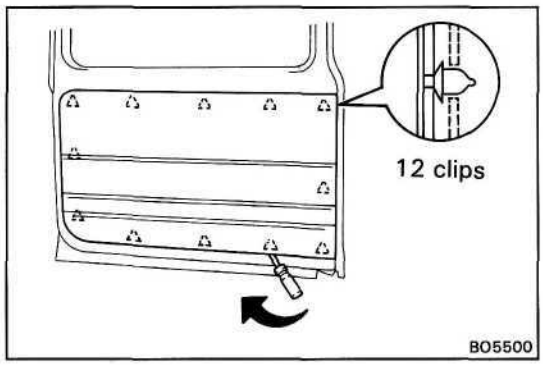

DISASSEMBLY OF RIGHT BACK DOOR

(See page BO-38)

1. REMOVE DOOR TRIM

Insert a screwdriver between the trim retainers and door panel to pry it loose.

HINT: Tape the screwdriver tip before use.

2. REMOVE SERVICE HOLE COVER

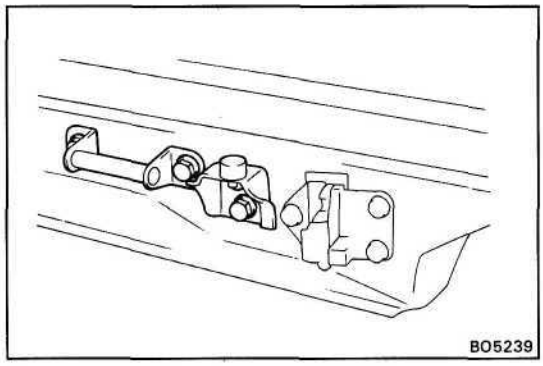

3. REMOVE DOOR STOPPER

Remove two bolts and the door stopper.

4. REMOVE DOOR STOPPER BRACKET

Remove two bolts and the bracket.

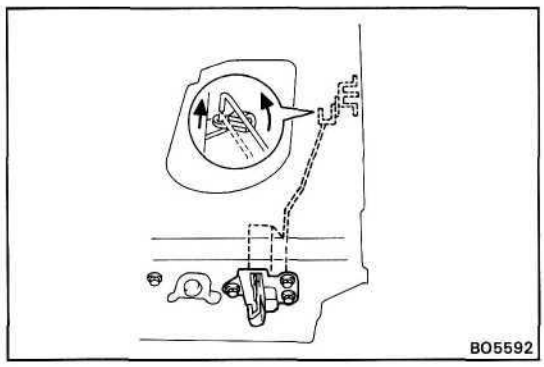

5. REMOVE LOWER DOOR LOCK

(a) Disconnect the link from the door lock control.

(b) Remove the three bolts and the lower door lock.

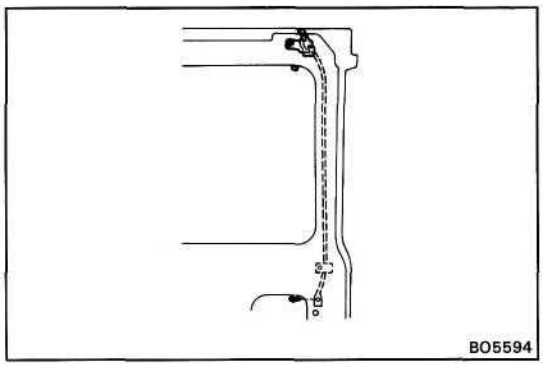

6. REMOVE UPPER DOOR LOCK

(a) Remove the screw from the control link.

(b) Remove the control link from the clip.

(c) Remove two bolts and upper door lock.

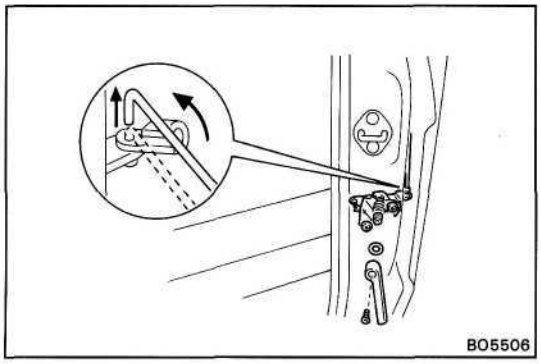

7. REMOVE DOOR LOCK CONTROL

(a) Remove control link from the door lock.

(b) Remove the screw and the handle.

(c) Remove two screws, bush and the door lock control.

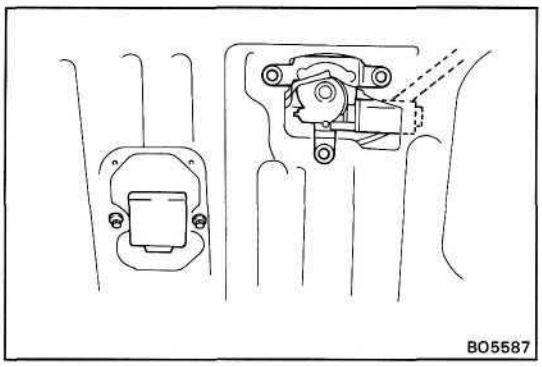

8. (w/ Rear Wiper)
REMOVE WIPER ARM, MOTOR AND WIPER CONTROL RELAY

(a) Remove a nut and wiper arm.

(b) Remove three bolts and wiper motor, then disconnect the connector.

(c) Remove two bolts and relay, then disconnect the connector.

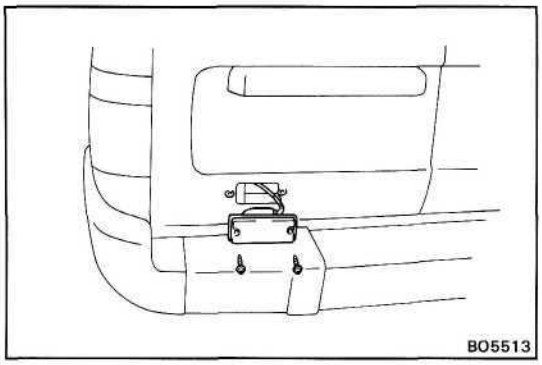

9. (w/ Fog Light)
REMOVE FOG LIGHT

Remove two screws and the light, then disconnect the connector.

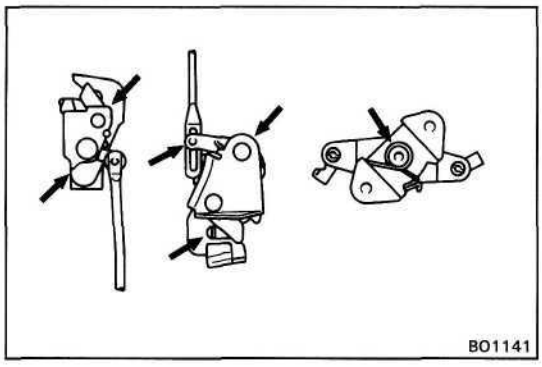

ASSEMBLY OF RIGHT BACK DOOR

(See page BO-38)

1. BEFORE INSTALLING PARTS, APPLY MP GREASE TO THEM

(a) Apply MP grease to the sliding surface of the door lock.

(b) Apply MP grease to the sliding surface of the door lock control.

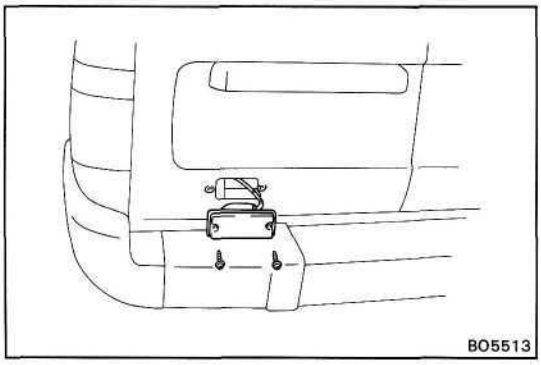

2. (w/ Fog Light)
INSTALL REAR FOG LIGHT

Connect the connector and install the light with two screws.

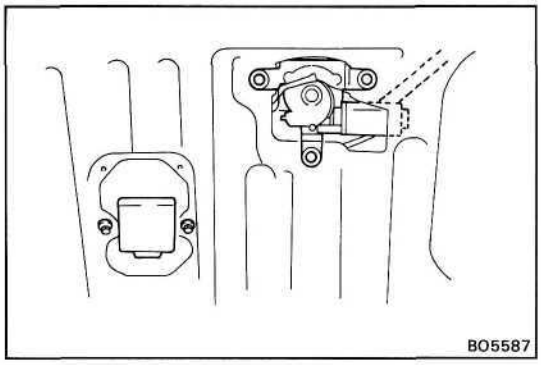

3. (w/ Rear Wiper)
INSTALL WIPER ARM, MOTOR AND WIPER CONTROL RELAY

(a) Connect the connector and install the relay with two bolts.

(b) Connect the connector and install the motor with three bolts.

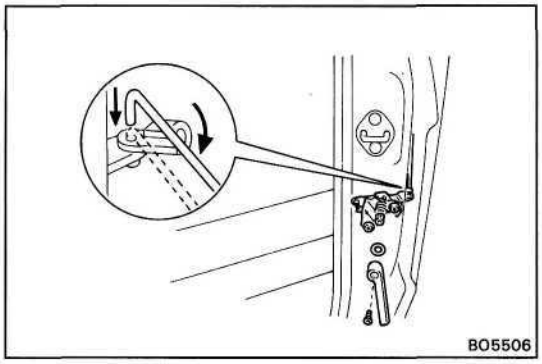

4. INSTALL DOOR LOCK CONTROL

(a) Install the bush and the lock control with two screws.

(b) Install the inside handle with a screw.

(c) Connect the control link to the door lock.

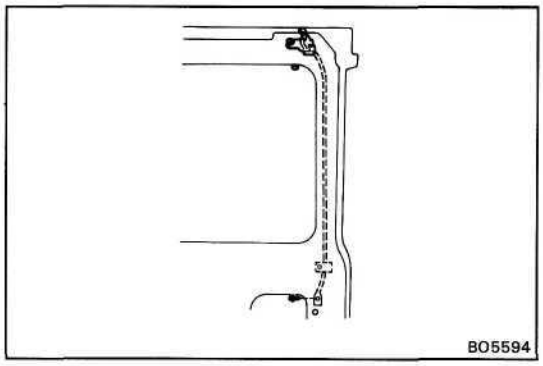

5. INSTALL UPPER DOOR LOCK

(a) Install the upper door lock with two bolts.

(b) Install the control link to the clip.

(c) Install the link with the screw.

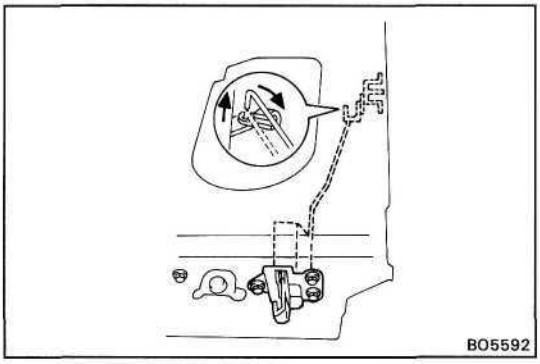

6. INSTALL LOWER DOOR LOCK

(a) Install the lower door lock with the three bolts.

(b) Connect the link to the door lock control.

7. CHECK DOOR LOCK OPERATION

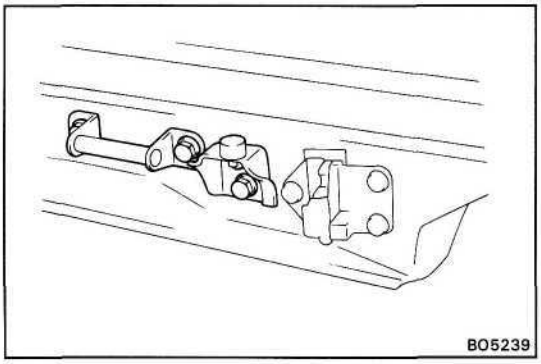

8. INSTALL DOOR STOPPER BRACKET

Install the door stopper bracket with two bolts.

9. INSTALL DOOR STOPPER

Install the door stopper with two bolts.

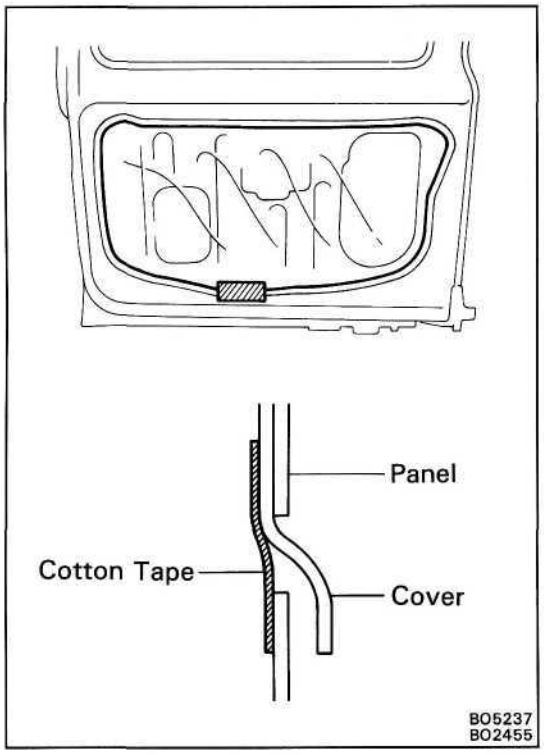

10. INSTALL SERVICE HOLE COVER

(a) Seal the service hole cover with adhesive.

(b) Insert the lower edge of the service hole cover into the panel slit.

(c) Seal the panel slit with cotton tape.

NOTICE: Do not block the trim clip seating with the tape.

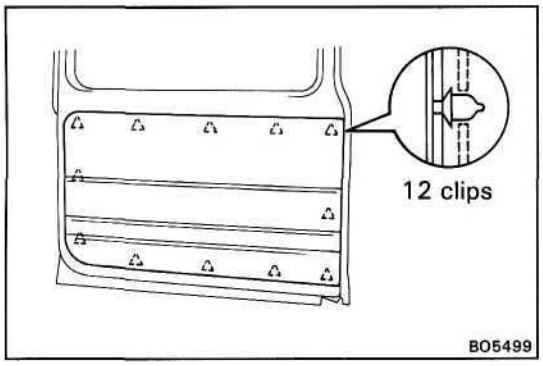

11. INSTALL DOOR TRIM

Install the door trim with clips to the inside door panel by tapping.

BACK DOOR (Swing Out Type)

Left Back Door

COMPONENTS

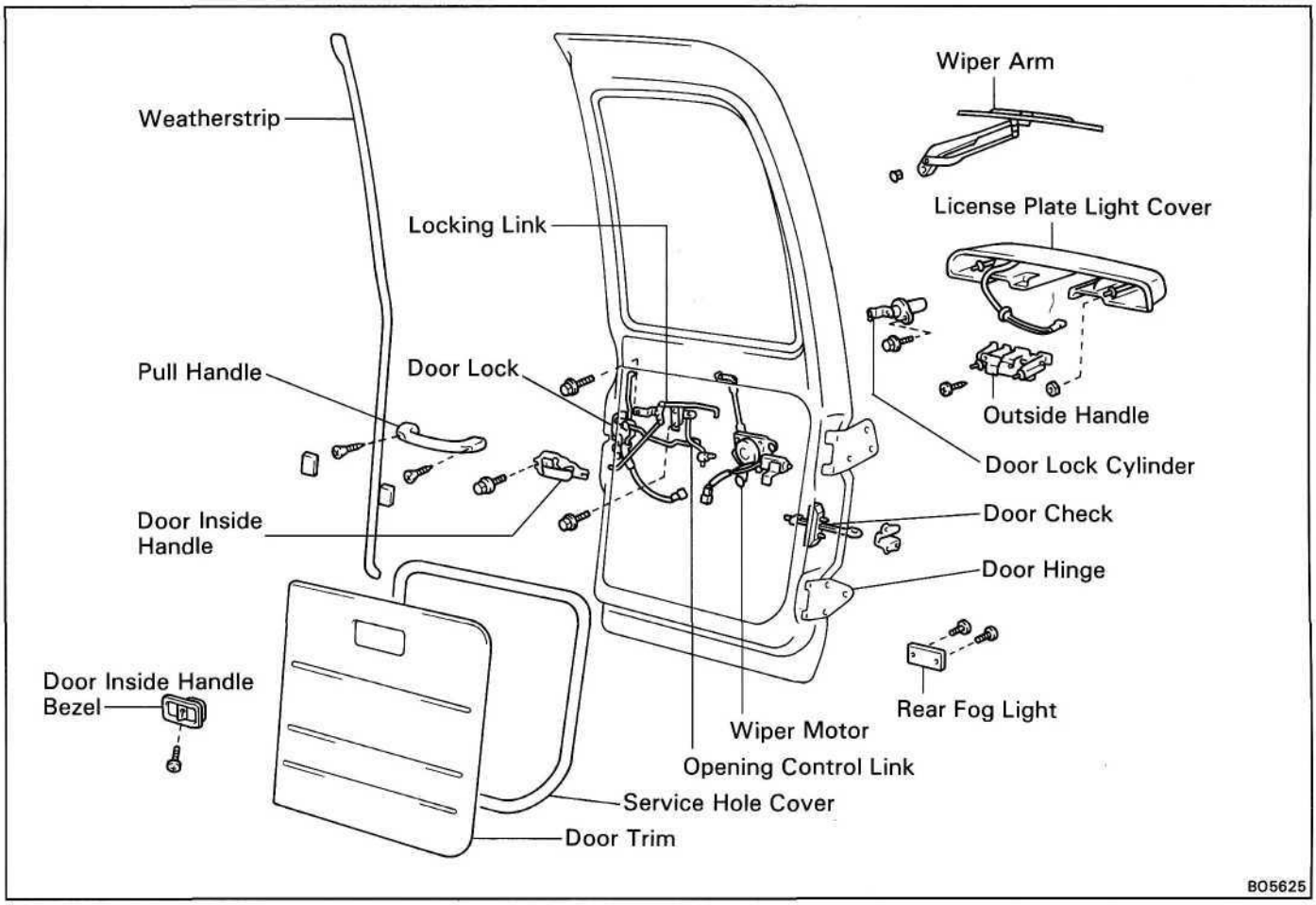

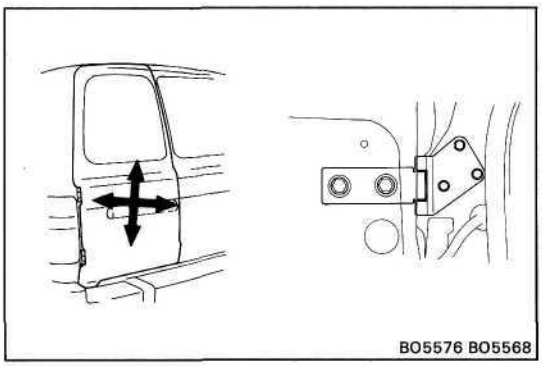

ADJUSTMENT OF LEFT BACK DOOR

1. ADJUST DOOR IN FORWARD/REARWARD AND VERTICAL DIRECTIONS

Adjust the door by loosening the body side hinge bolts.

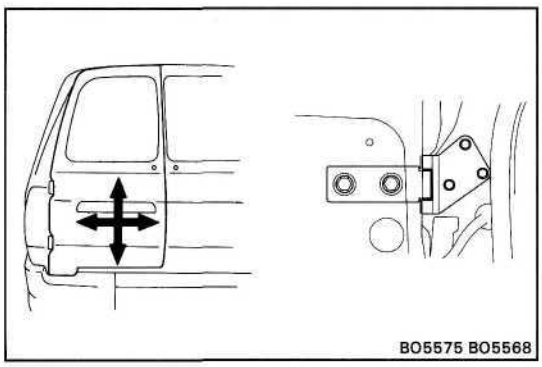

2. ADJUST DOOR IN LEFT/RIGHT AND VERTICAL DIRECTIONS

Adjust the door by loosening the door side hinge bolts.

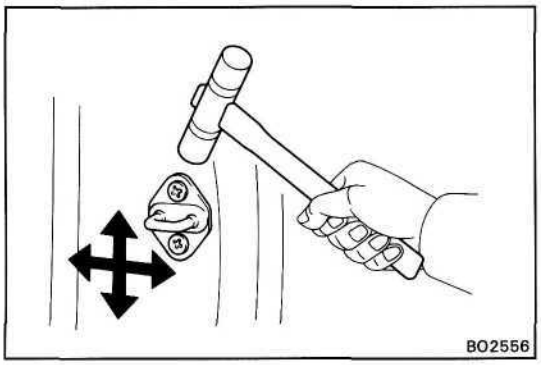

3. ADJUST DOOR LOCK STRIKER

(a) Check that the door fit and door lock linkages are adjusted correctly.

(b) Adjust the striker position by slightly loosening the striker mounting screws, and hitting the striker with a hammer. Tighten the striker mounting screws again.

DISASSEMBLY OF LEFT BACK DOOR

(See page BO-43)

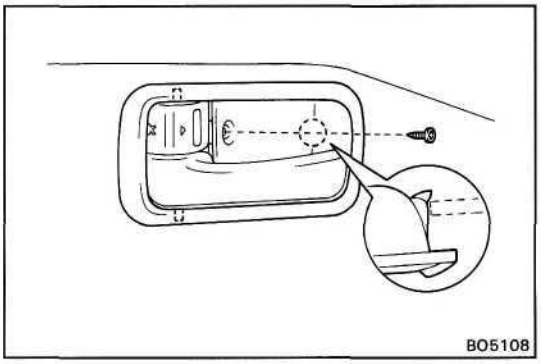

1. REMOVE PULL HANDLE

Remove two covers, two screws and pull handle.

2. REMOVE DOOR INSIDE HANDLE BEZEL

(a) Remove the screw.

(b) Pry loose the clip and claws of the bezel to remove it.

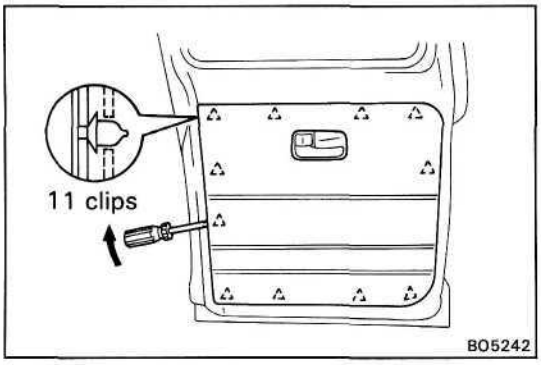

3. REMOVE DOOR TRIM

Insert a screwdriver between the trim retainers and door panel to pry it lose.

HINT: Tape the screw driver tip before use.

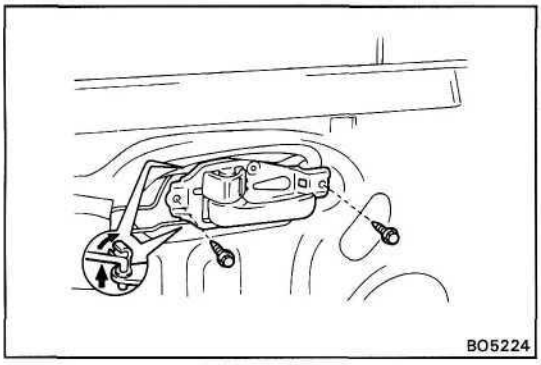

4. REMOVE DOOR INSIDE HANDLE

(a) Remove two bolts.

(b) Disconnect two links from the inside handle.

5. REMOVE SERVICE HOLE COVER

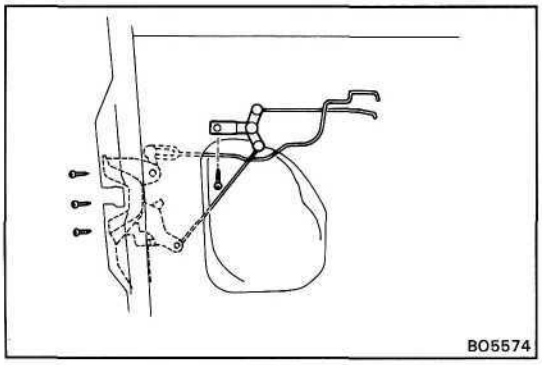

6. REMOVE DOOR LOCK

(a) Remove a screw of control link.

(b) Disconnect three links from the door lock control and the door lock cylinder.

(c) Remove three screws and the door lock.

(d) Remove the control link from the outside handle, then remove the two bolts and the lock control.

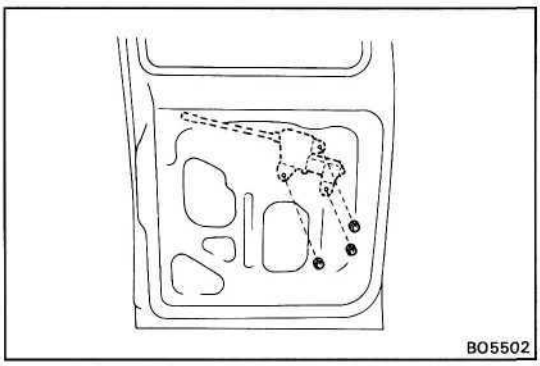

7. (w/ Wiper)
REMOVE WIPER ARM AND MOTOR

(a) Remove the nut and the wiper arm.

(b) Remove three nuts and the wiper motor, then disconnect the connector.

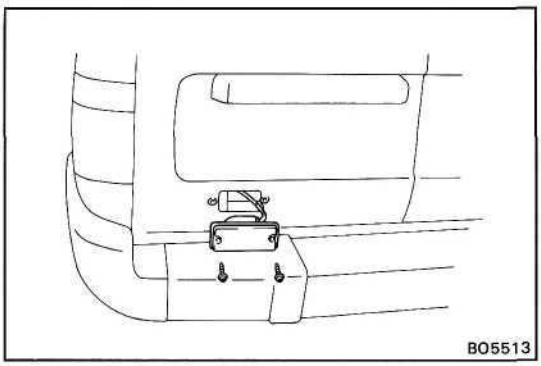

8. (w/ Fog Light)
REMOVE FOG LIGHT

Remove two screws and the light, then disconnect the connector.

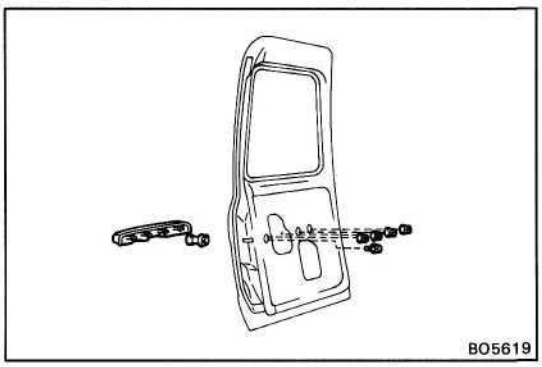

9. REMOVE LICENSE PLATE LIGHT COVER AND DOOR LOCK CYLINDER

(a) Remove four nuts and the light cover, then disconnect the connector.

(b) Remove the bolt from the lock cylinder.

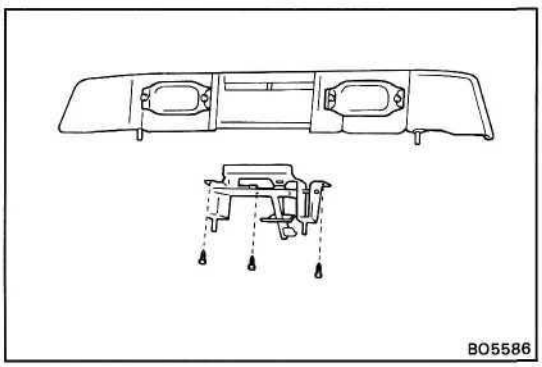

10. REMOVE OUTSIDE HANDLE

Remove three screws and the outside handle from the license plate lamp cover.

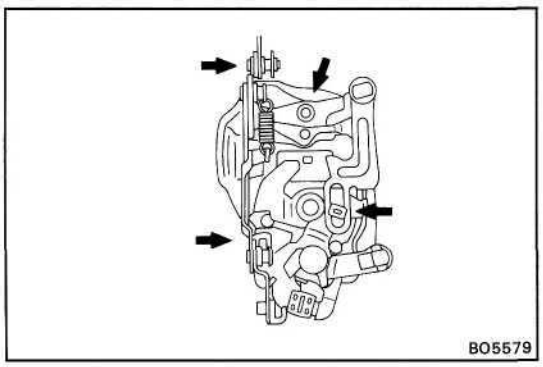

ASSEMBLY OF LEFT BACK DOOR

(See page BO-43)

1. APPLY OF MP GREASE TO DOOR LOCK

Apply MP grease to the sliding surface of the door lock.

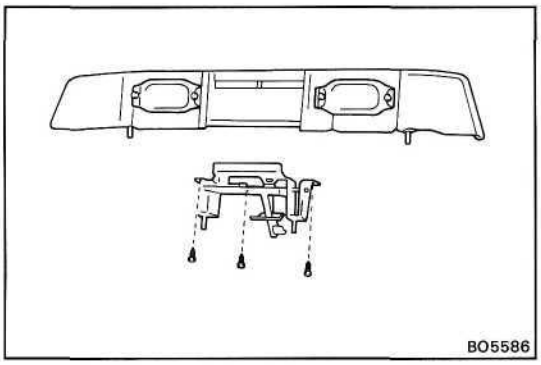

2. INSTALL OUTSIDE HANDLE

Install the outside handle with three screws to the license plate light cover.

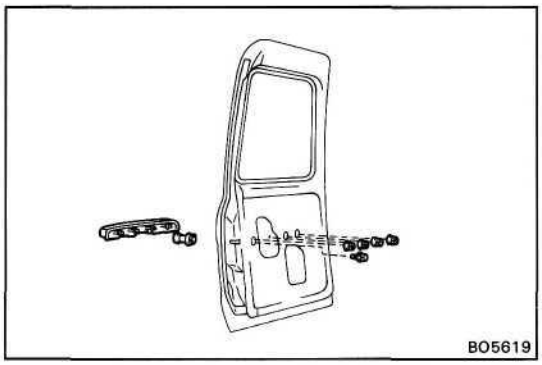

3. INSTALL LICENSE PLATE LIGHT COVER AND DOOR LOCK CYLINDER

(a) Install the lock cylinder with the blot.

(b) Install the light cover with four nuts, then connect the connector.

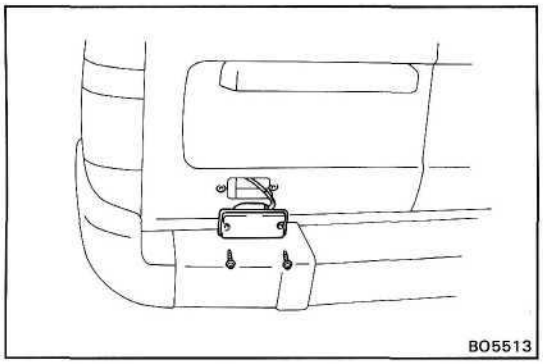

4. (w/ Fog Light)
INSTALL FOG LIGHT

Connect the connector, then install the fog light with two screws.

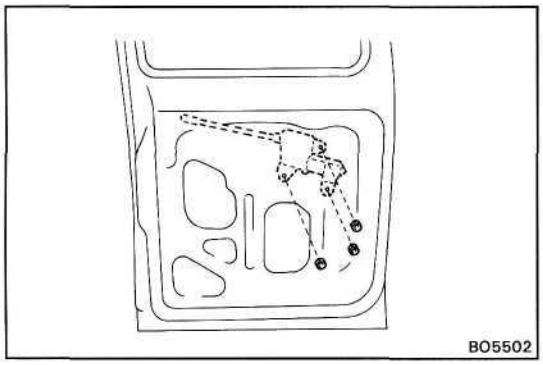

5. (w/ **Wiper)**
INSTALL WIPER ARM AND MOTOR

(a) Install the wiper motor with three nuts, then connect the connector.

(b) Install the wiper arm with the nut.

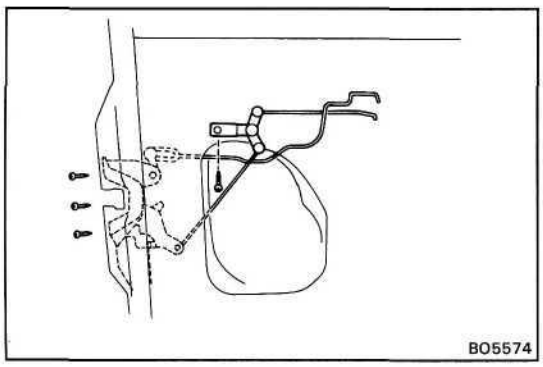

6. INSTALL DOOR LOCK

(a) Install the control link to the outside handle then, install the two bolts and the lock control.

(b) Install the door lock with three screws.

(c) Connect three links to the door lock control and the door lock cylinder.

(d) Install the control link with the screw.

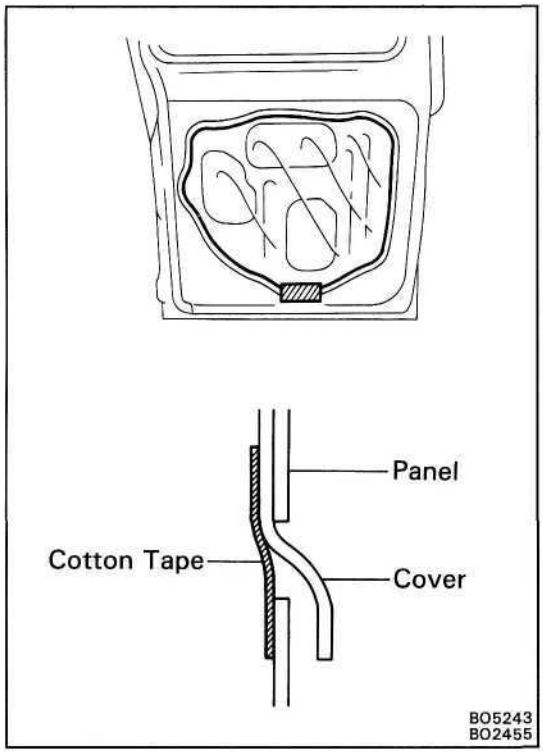

7. INSTALL SERVICE HOLE COVER

(a) Seal the service hole cover with adhesive.

(b) Insert the lower edge of the service hole cover into the panel slit.

(c) Seal the panel slit with cotton tape.

NOTICE: Do not block the trim clip seating with the tape.

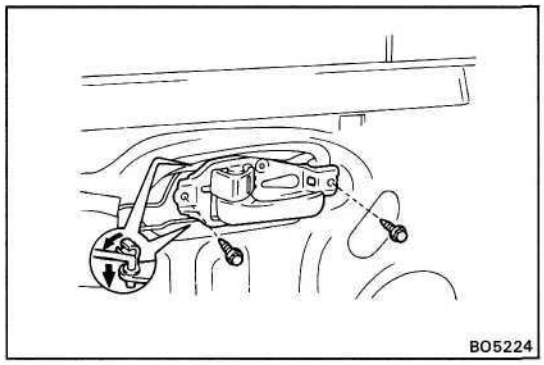

8. INSTALL DOOR INSIDE HANDLE

Connect two links to the inside handle, then install it with two bolts.

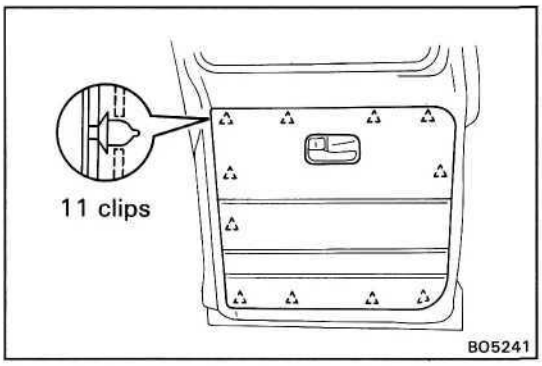

9. INSTALL DOOR TRIM

Install the door trim with clips to the inside door panel by tapping.

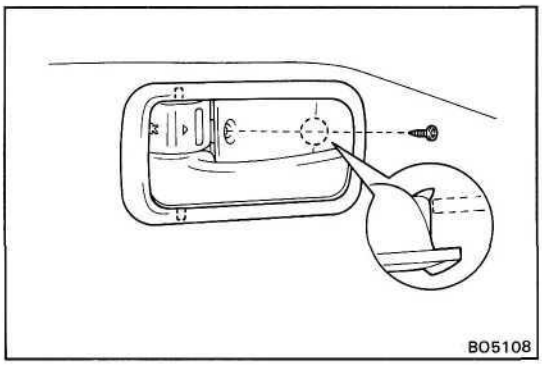

10. INSTALL DOOR INSIDE HANDLE BEZEL

(a) Push in the bezel to install it.

(b) Install the screw.

11. INSTALL PULL HANDLE

Install the pull handle with two screws, then install two covers.

MOULDING

Windshield Moulding

COMPONENTS

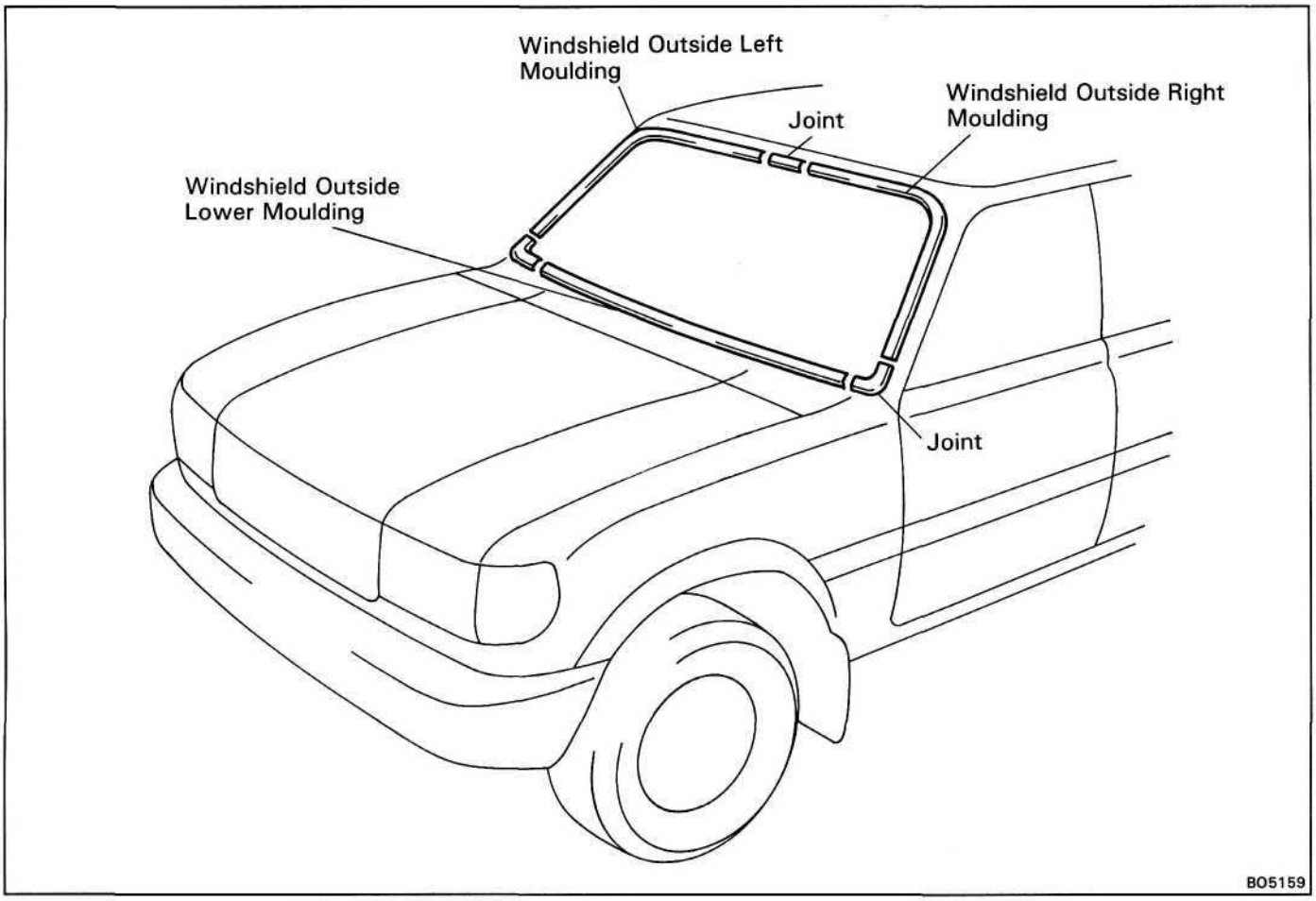

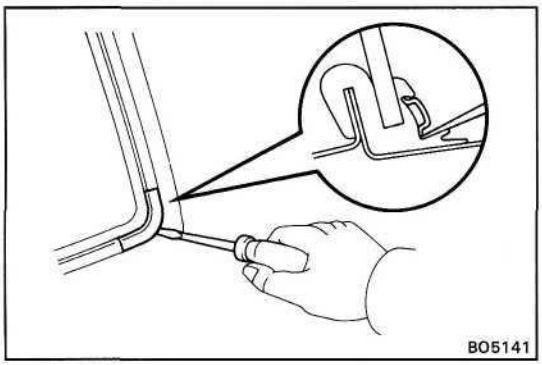

REMOVAL OF WINDSHIELD MOULDING

REMOVE WINDSHIELD OUTSIDE MOULDING

(a) Using a screwdriver, pull off the joint cover.

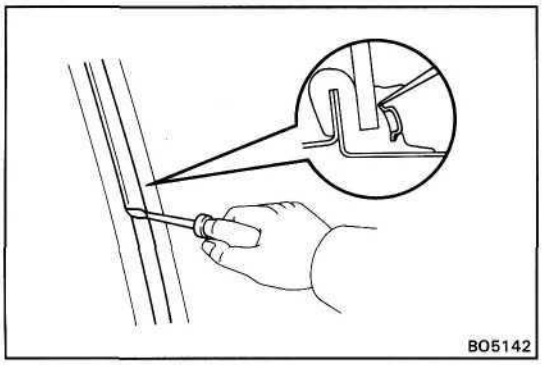

(b) Using a screwdriver, pull off the moulding from the end.

INSTALLATION OF WINDSHIELD MOULDING

INSTALL WINDSHIELD OUTSIDE MOULDING

Using a screwdriver, install the moulding and joint cover.

Body Outside Moulding

COMPONENTS

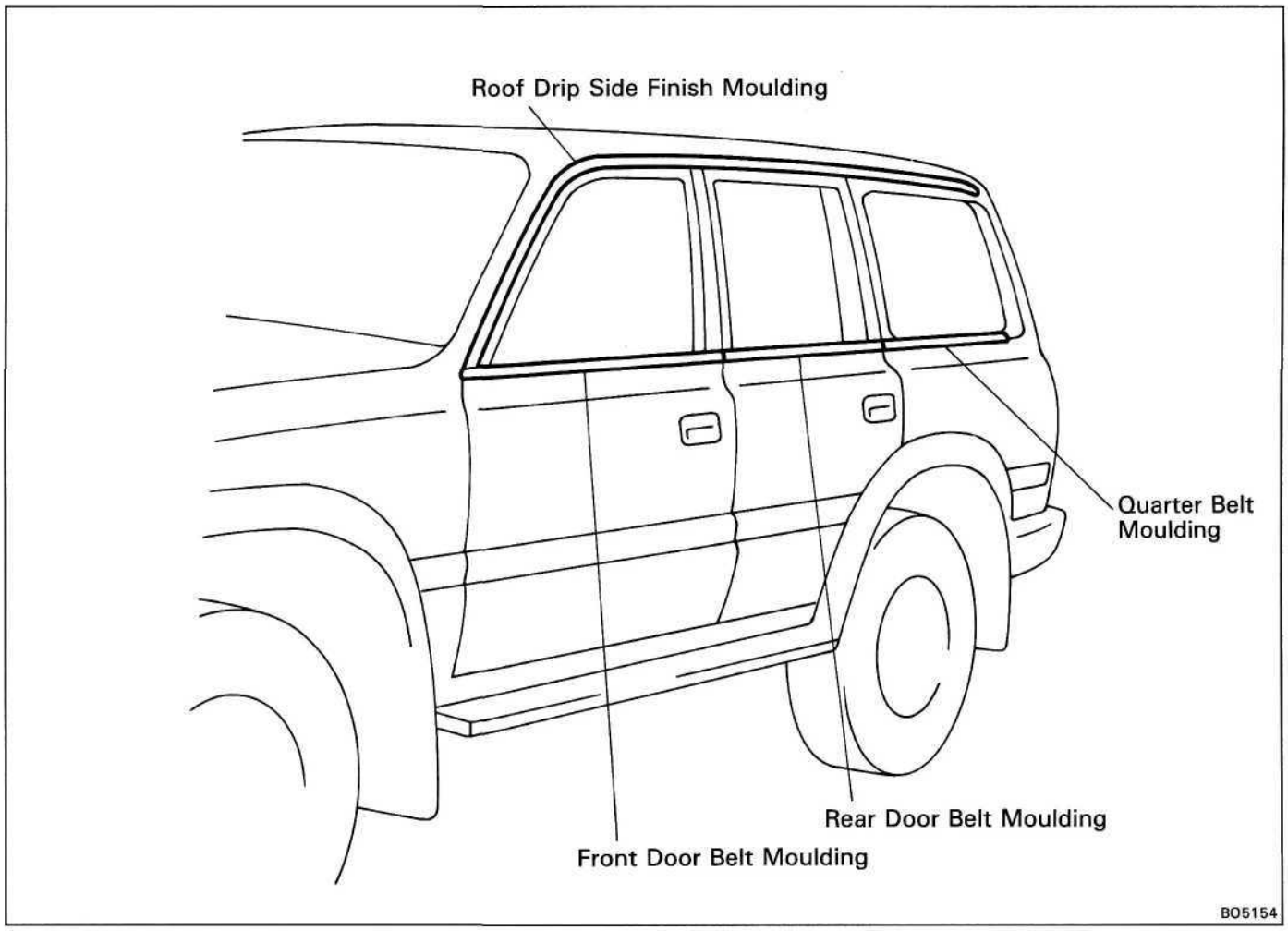

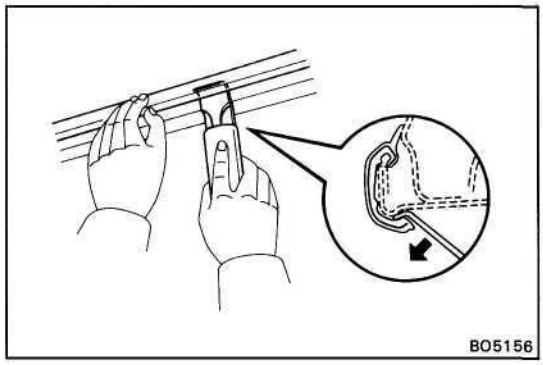

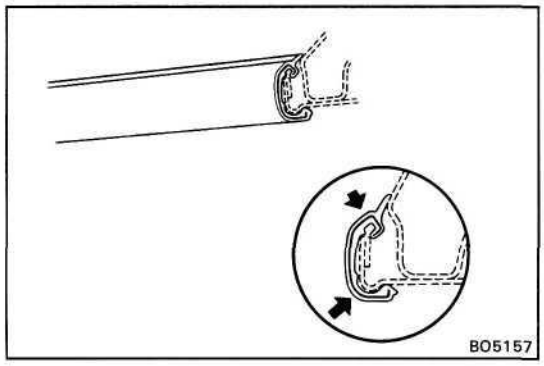

Roof Drip Side Finish Moulding

REMOVAL OF ROOF DRIP SIDE FINISH MOULDING

REMOVE ROOF DRIP SIDE FINISH MOULDING

Using SST, pull off the roof drip moulding from front ends.

SST 09806-30010

INSTALLATION OF ROOF DRIP SIDE FINISH MOULDING

INSTALL ROOF DRIP SIDE FINISH MOULDING

Attach the upper edge of the moulding to the body flange. Tap on the moulding by hand.

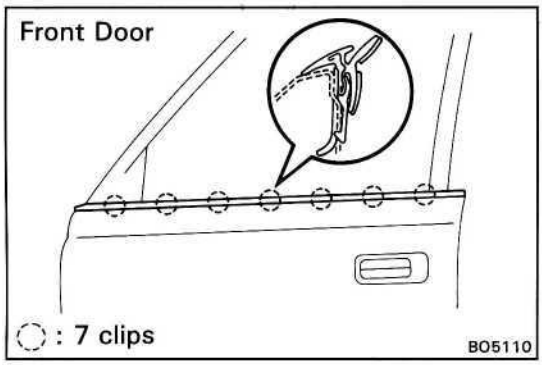

Door Belt Moulding

REMOVAL OF DOOR BELT MOULDING

1. **REMOVE FRONT DOOR BELT MOULDING (See step 7 on page BO-10)**
2. **REMOVE REAR DOOR BELT MOULDING (See step 10 on page BO-21)**

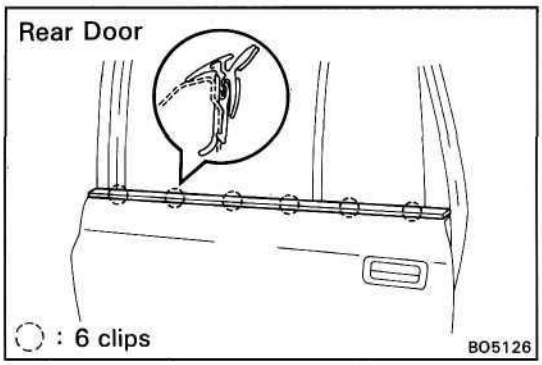

INSTALLATION OF DOOR BELT MOULDING

1. **INSTALL FRONT DOOR BELT MOULDING (See step 16 on page BO-16)**
2. **INSTALL REAR DOOR BELT MOULDING (See step 12 on page BO-25)**

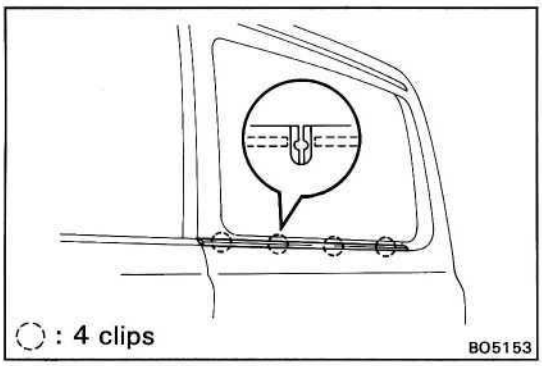

Quarter Belt Moulding

REMOVAL OF QUARTER BELT MOULDING

REMOVE QUARTER BELT MOULDING

Pry out the clips from the edge of the panel, and remove the moulding.

INSTALLATION OF QUARTER BELT MOULDING

INSTALL QUARTER BELT MOULDING

Insert the claw of the clips into the upper panel slit and push the moulding onto the panel.

Side Protection Moulding

PREPARE ITEMS LISTED

Part No.	Part name	Quantity
08850-00051	Adhesive (Super special) 20g (0.71 oz.)	1
	Cleaner (for cleaning body and removing body oil stains) Heat light	

Precautions for storing moulding material:

- Store in cool place, avoiding direct sunlight, high temperature and dust.
- The moulding is of polyvinyl chloride, so do not allow it to come in contact with thinner or other solvent, open flame, or boiling water.
- The storage time for the moulding and adhesive are limited to about 9 months.

COMPONENTS

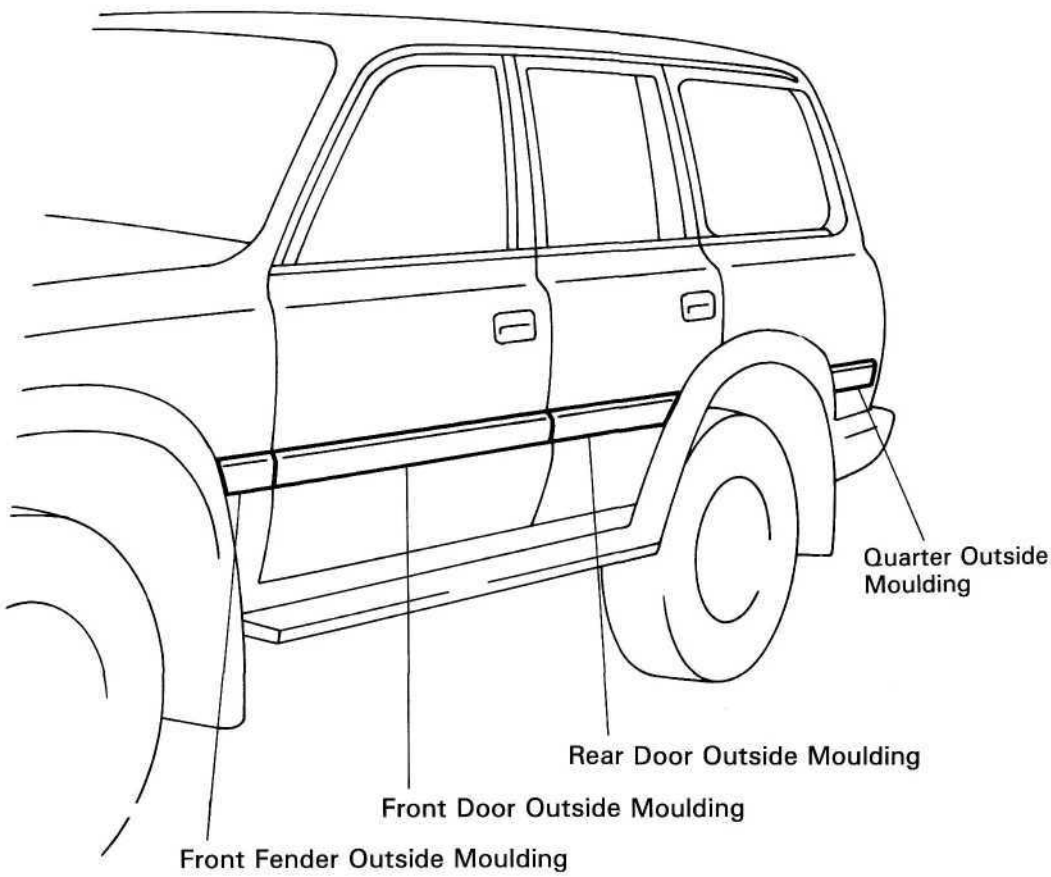

BO5155

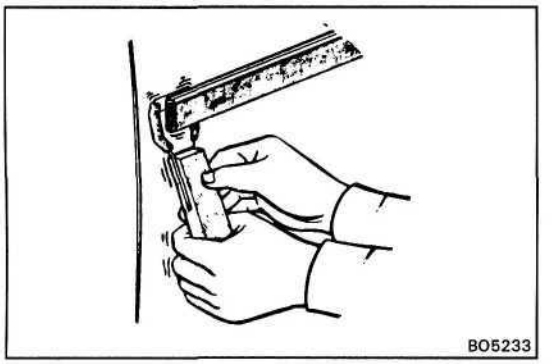

REMOVAL OF SIDE PROTECTION MOULDING

(See page BO-51)

1. REMOVE ENDS OF MOULDING

Using a scraper, pry the moulding loose about 30 mm (1.18 in.) from the ends.

HINT: Tape the scraper tip befoer use.

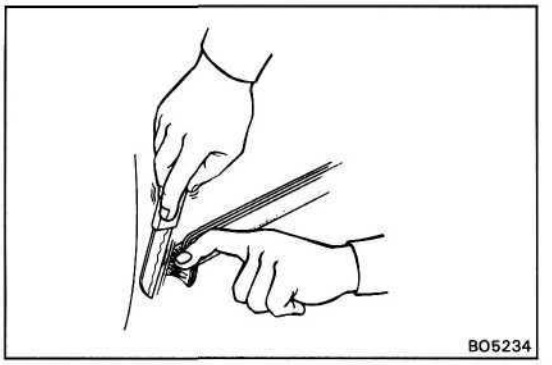

2. REMOVE MOULDING AND ADHESIVE

(a) Pull off the moulding by cutting the adhesive with a knife.

(b) Scrape off adhesive from the body with a cutter or sandpaper.

NOTICE:

- **Remember that 30 — 80 mm (1.18 - 3.15 in.) of the ends of the moulding are glued tightly with a strong adhesive.**
- **Do not reuse moulding.**

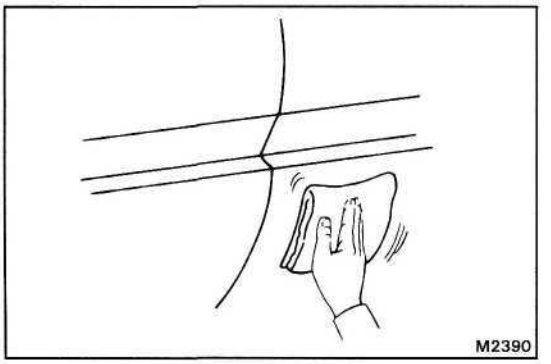

INSTALLATION OF SIDE PROTECTION MOULDING

1. CLEAN MOULDING MOUNTING SURFACE

Wipe off stains with cleaner.

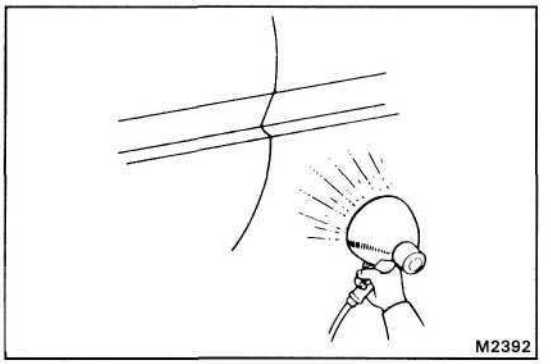

2. HEAT BODY MOUNTING SURFACE

Using a heat light, heat the body mounting surface to 30 - 50°C (86 - 122°F).

NOTICE: When the moulding is installed, the temperature of the mounting surface should be 20°C (68°F) or higher.

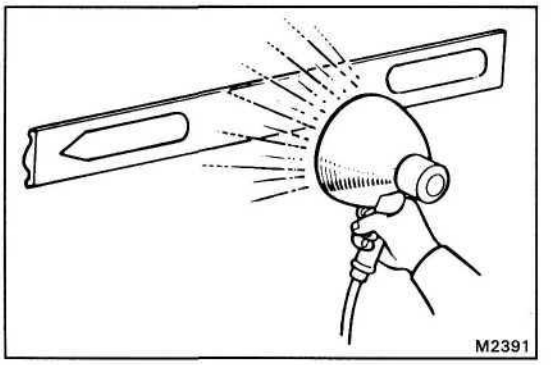

3. HEAT MOULDING

Using a heat light, heat the moulding to 30 - 60°C (86 - 140°F).

NOTICE: Do not heat moulding excessively.

The temperature should not be higher than 80°C (176°F).

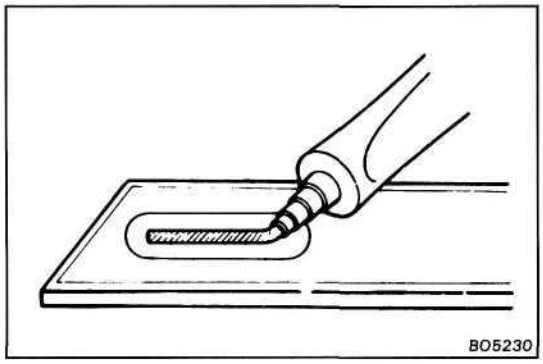

4. APPLY ADHESIVE TO MOULDING

Apply adhesive to both punched out ends of the moulding.

NOTICE: Install the moulding within 7 minutes after applying the adhesive.

5. LIFT MOULDING RELEASE SHEET FROM FACE OF MOULDING

NOTICE: When the moulding release sheet is removed, be sure that no dirt or dust can get onto the uncovered ared.

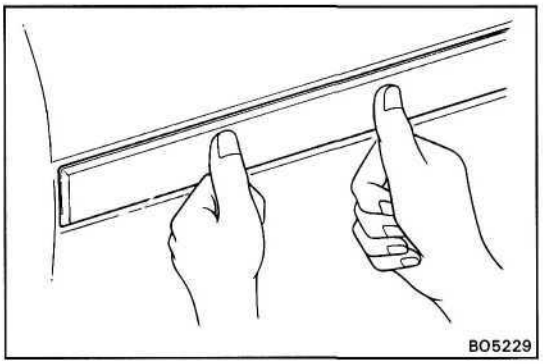

6. INSTALL MOULDING

Align the bosses on the moulding with the body holes, and push the moulding to the body.

NOTICE:

- **Be sure that the body and moulding are heated to the proper temperature.**
- **Do not depress the adhesive-coated parts excessively just hold them down with your thumb.**
- **Scrape off any overflowing adhesive with a plastic spatula and clean the surface with a dry rag.**
- **After installation, do not wash the vehicle for 24 hours.**

Back Door Moulding

COMPONENTS

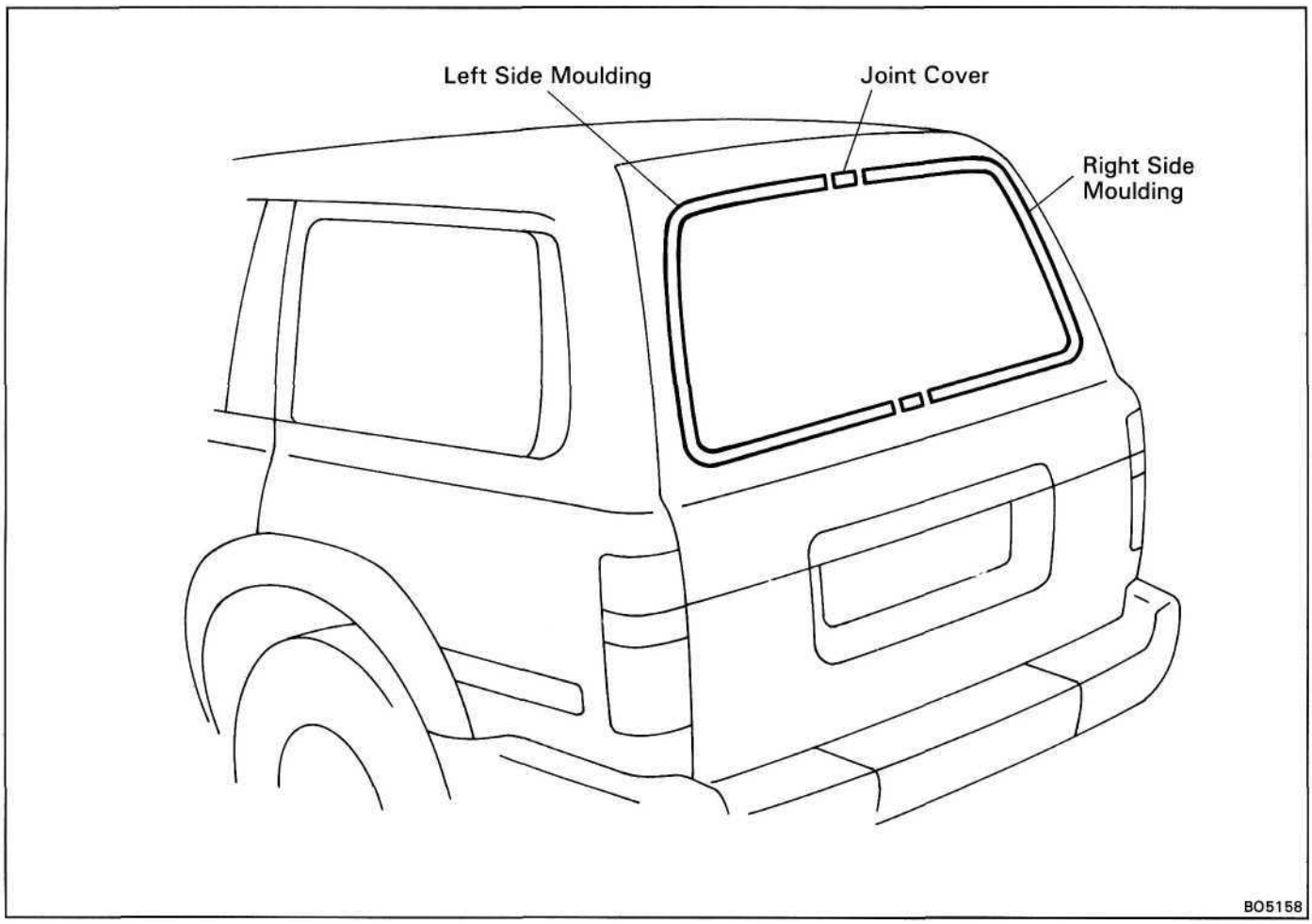

REMOVAL OF BACK DOOR MOULDING

HINT: Remove the moulding in the same manner as the windshield moulding. (See page BO-48)

INSTALLATION OF BACK DOOR MOULDING

HINT: Install the moulding in the same manner as the windshield moulding. (See page BO-48)

Wheel Opening Extension

COMPONENTS

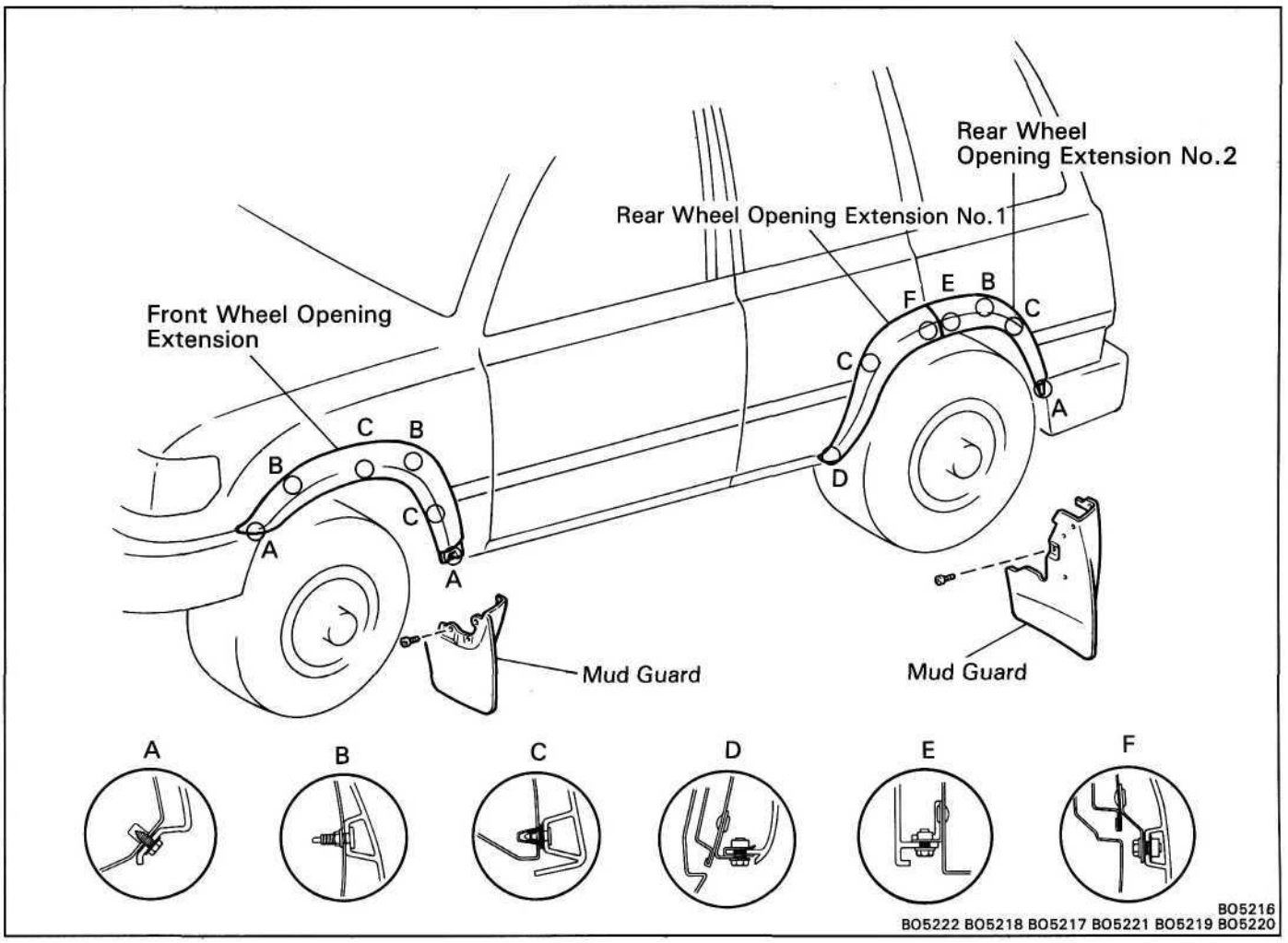

REMOVAL OF FRONT WHEEL OPENING EXTENSION

1. REMOVE FRONT MUD GUARD

Remove six screws and the mud guard.

2. REMOVE FRONT WHEEL OPENING EXTENSION

(a) Remove two bolts and two nuts.

(b) Remove the extension by pulling.

REMOVAL OF REAR WHEEL OPENING EXTENSION NO.1

REMOVE REAR WHEEL OPENING EXTENSION

(a) Remove two bolts.

(b) Remove the extension by pulling.

REMOVAL OF REAR WHEEL OPENING EXTENSION NO.2

(See page BO-55)

1. **REMOVE REAR MUD GUARD**

   Remove eight screws and the mud guard.

2. **REMOVE REAR WHEEL OPENING EXTENSION NO.2**

   (a) Remove two bolts and the nut.

   (b) Remove the extension by pulling.

INSTALL OF FRONT WHEEL OPENING EXTENSION

(See page BO-55)

1. **INSTALL FRONT WHEEL OPENING EXTENSION**

   (a) Tap the extension to install it.

   (b) Install two bolts and two nuts.

2. **INSTALL FRONT MUD GUARD**

   Install the mud guard with six screws.

INSTALL OF REAR WHEEL OPENING EXTENSION NO.1

(See page BO-55)

INSTALL REAR WHEEL OPENING EXTENSION NO.1

(a) Tap the extension to install it.

(b) Install two bolts.

INSTALL OF REAR WHEEL OPENING EXTENSION NO.2

(See page BO-55)

1. **INSTALL REAR WHEEL OPENING EXTENSION NO.2**

   (a) Tap the extension to install it.

   (b) Install two bolts and the nut.

2. **INSTALL MUD GUARD**

   Install the mud guard with eight screws.

WINDSHIELD

PREPARE ITEMS LISTED

Part name and No.	Contents of set
Auto glass sealer (08833-00030 or equivalent)	
Materials required	Cleaner (for cleaning adhering surfaces)

COMPONENTS

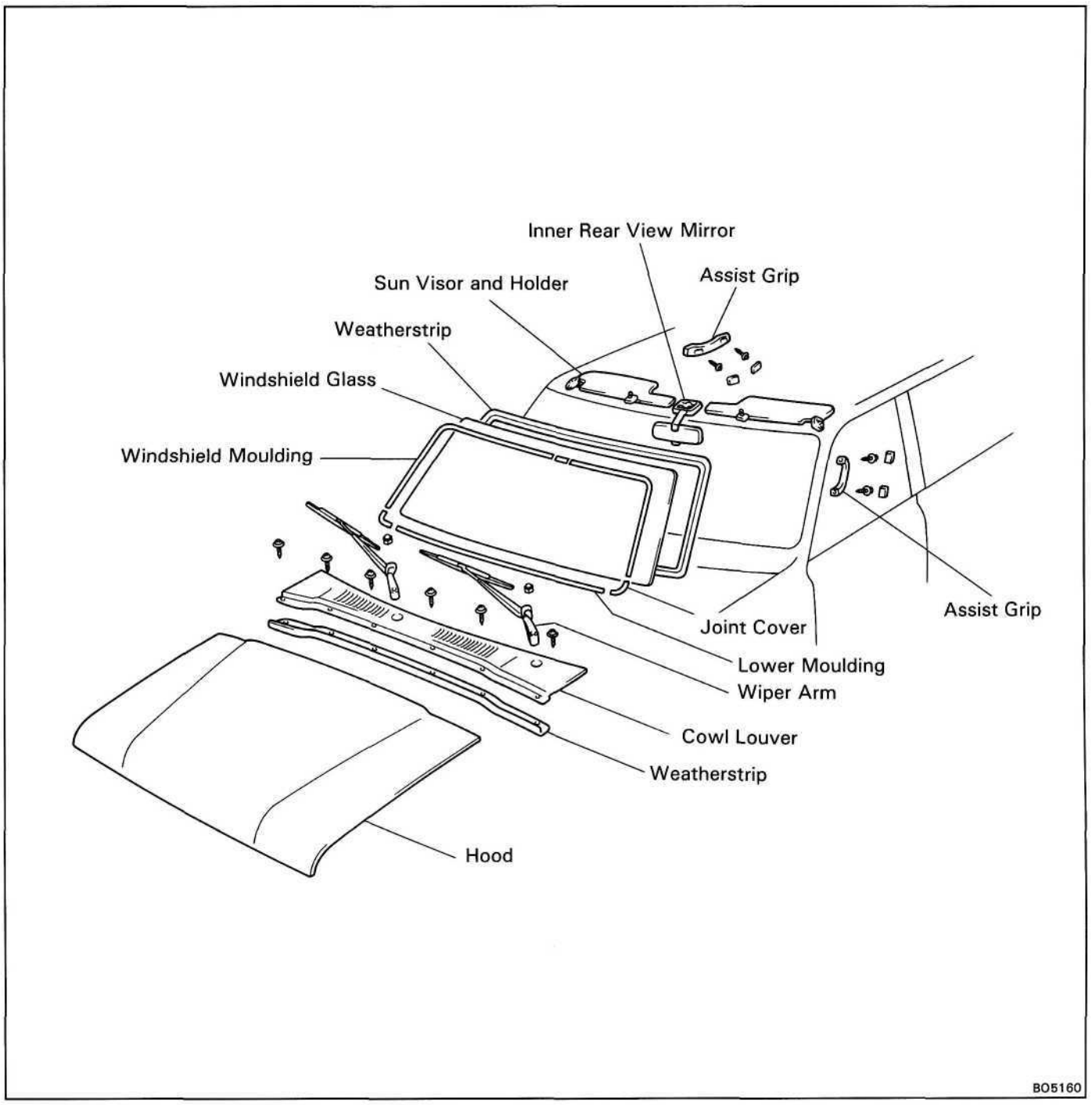

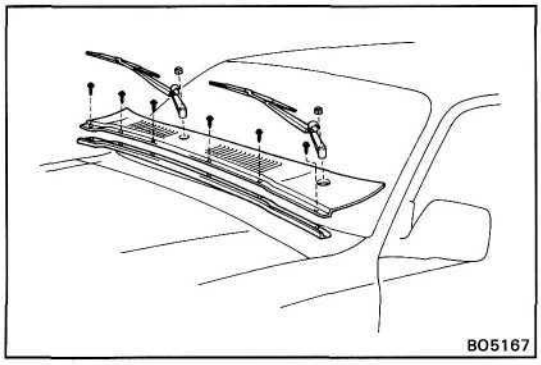

REMOVAL OF WINDSHIELD

(See page BO-57)

1. REMOVE FRONT HOOD

2. REMOVE WIPER ARMS

(a) Open two caps.

(b) Remove two nuts and the wiper arms.

3. REMOVE COWL LOUVER

Remove sixs screws, cowl louver and weatherstrip.

4. REMOVE FOLLOWING PARTS:

- Inner rear view mirror
- Sun visors and holders.
- Assist grips

5. (w/ Windshield Moulding)
REMOVE WINDSHIELD MOULDING
(See page BO-48)

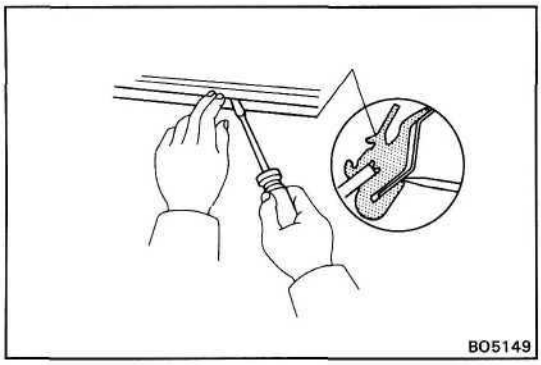

6. REMOVE WINDSHIELD GLASS

If reusing the weatherstrip:

(a) Using a screwdriver, loosen the weatherstrip from the body.

NOTICE: Be careful not to damage the boldy.

(b) Pry the lip of the weatherstrip outward from the interior part of the body flange.

(c) Pull the glass outwards and remove it with the weatherstrip.

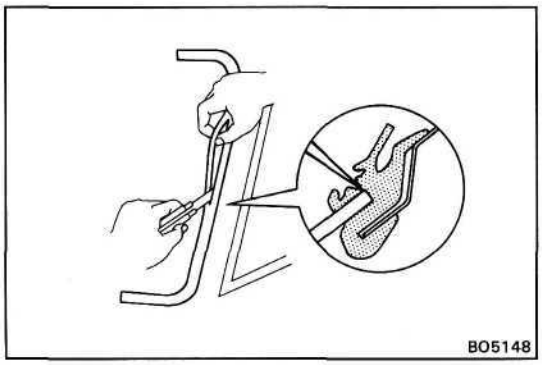

If using a new weatherstrip

(a) From the outside of the vehicle, cut off the weatherstrip lip with a knife.

NOTICE: Be careful not to damage the body.

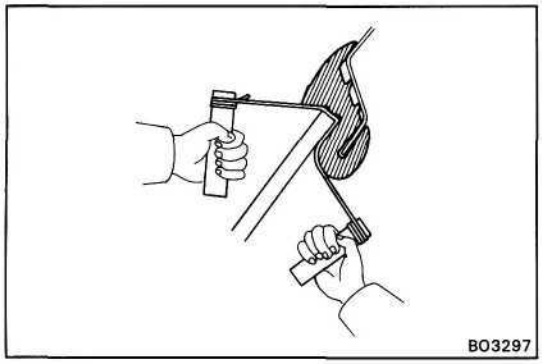

(b) Push piano wire through from the interior.

(c) Tie both wire ends to the wooden blocks or equivalent.

NOTICE: When separating, take care not to damage the paint or interior ornaments.
To prevent scratching the safety pad when removing the windshield, place a plastic sheet between the piano wire and safety pad.

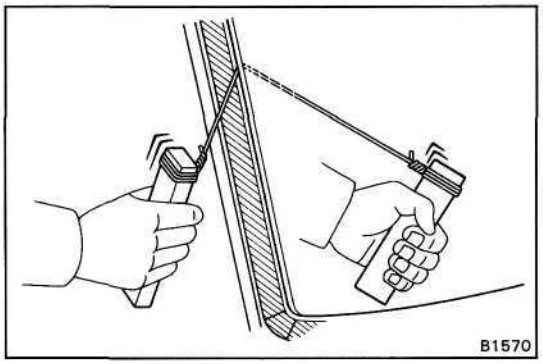

(d) Cut the adhesive by pulling the piano wire around it.

(e) Remove the glass.

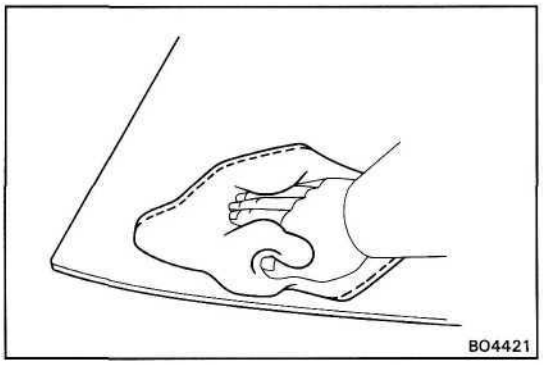

INSTALLATION OF WINDSHIELD

(See page BO-57)

1. CLEAN BODY AND GLASS

Using cleaner, clean the weatherstrip contacting surface of the body and the glass.

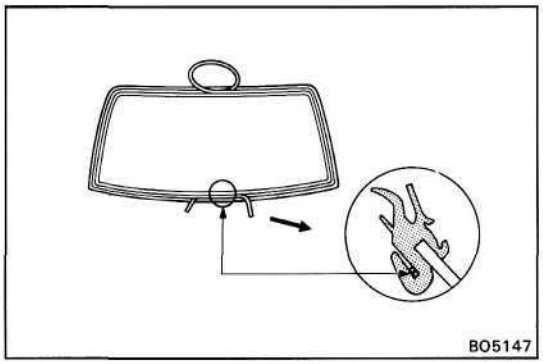

2. INSTALL WEATHERSTRIP ON GLASS

(a) Attach the weatherstrip to the glass.

NOTICE: If the weatherstrip has hardened, it way develop water leaks. Use a new one if possible.

(b) Apply a working cord along the weatherstrip groove as shown.

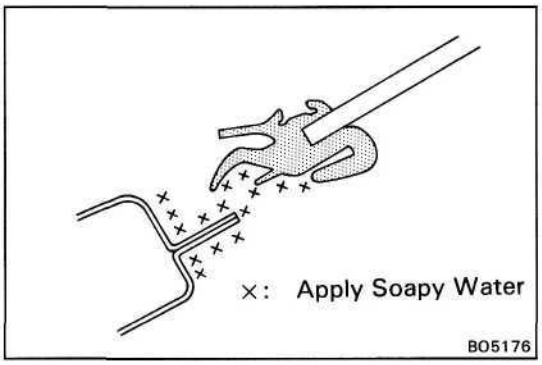

3. INSTALL GLASS

(a) Apply soapy water to the contact surface of the weatherstrip lip and to the body flange.

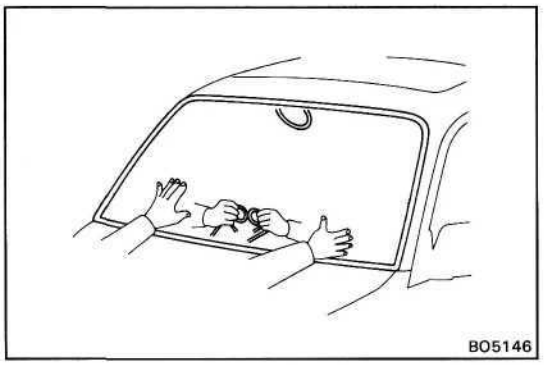

HINT: Begin installation in the middle of the lower part of the glass.

(b) Hold the glass in position on the body.

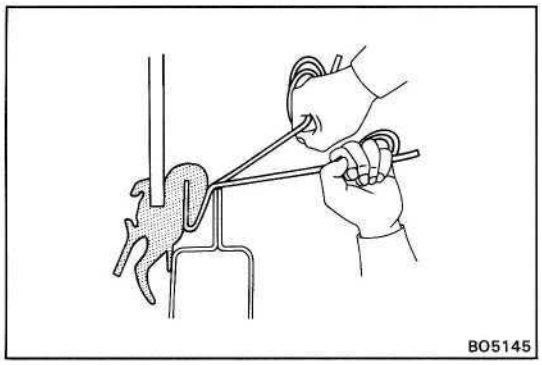

(c) From the inside, pull on one cord at an angle so it pulls the lip over the flange. From the outside, press the glass along the weatherstrip until the glass is installed.

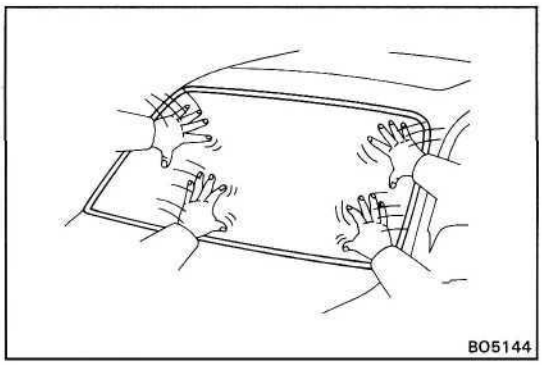

4. SNUG DOWN GLASS

To snug down the glass, tap from the outside with your open hand.

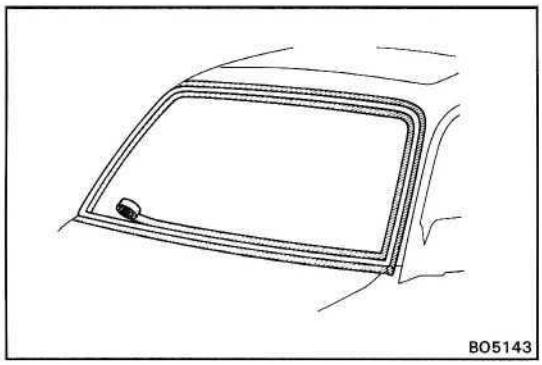

5. APPLY ADHESIVE

(a) Put masking tape around the weatherstrip to protect the paint and the glass.

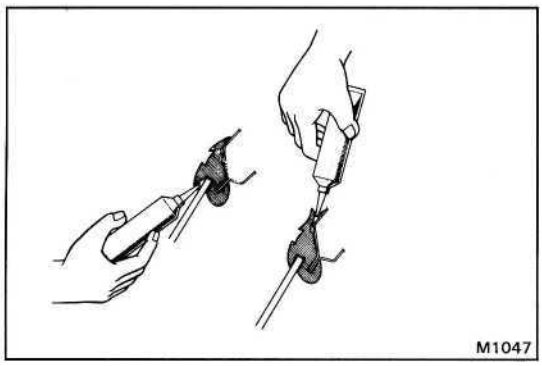

(b) Apply auto glass sealer to the weatherstrip lip as shown.

Part No. 08833-00030 or equivalent

6. CLEANING SEALER SURFACE

(a) After auto glass sealer dry, remove the masking tape.

HINT: The auto glass sealer will harden in about 15 hours.

(b) Clean off the sealer oozing out from the masking tape with a clean rag saturated in cleaner.

7. INSPECT FOR LEAKS AND REPAIR

(a) Perform a leak test.

(b) Seal any leaks with auto glass sealer.

Part No. 08833-00030 or equivalent

8. (w/ **Windshield Moulding)**
INSTALL WINDSHIELD MOULDING
(See page BO-48)

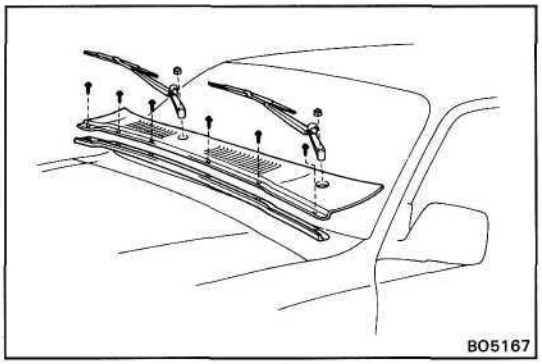

9. INSTALL COWL LOUVER

Install the weatherstrip, the cowl louver with six screws.

10. INSTALL WIPER ARM

(a) Install the wiper arms with two nuts.

(b) Close two caps.

11. INSTALL HOOD

12. ADJUST HOOD
(See page BO-5)

13. INSTALL FOLLOWING PARTS

- Sun visor and holder
- Inner rear view mirror
- Assist grips

QUARTER WINDOW GLASS

COMPONENTS

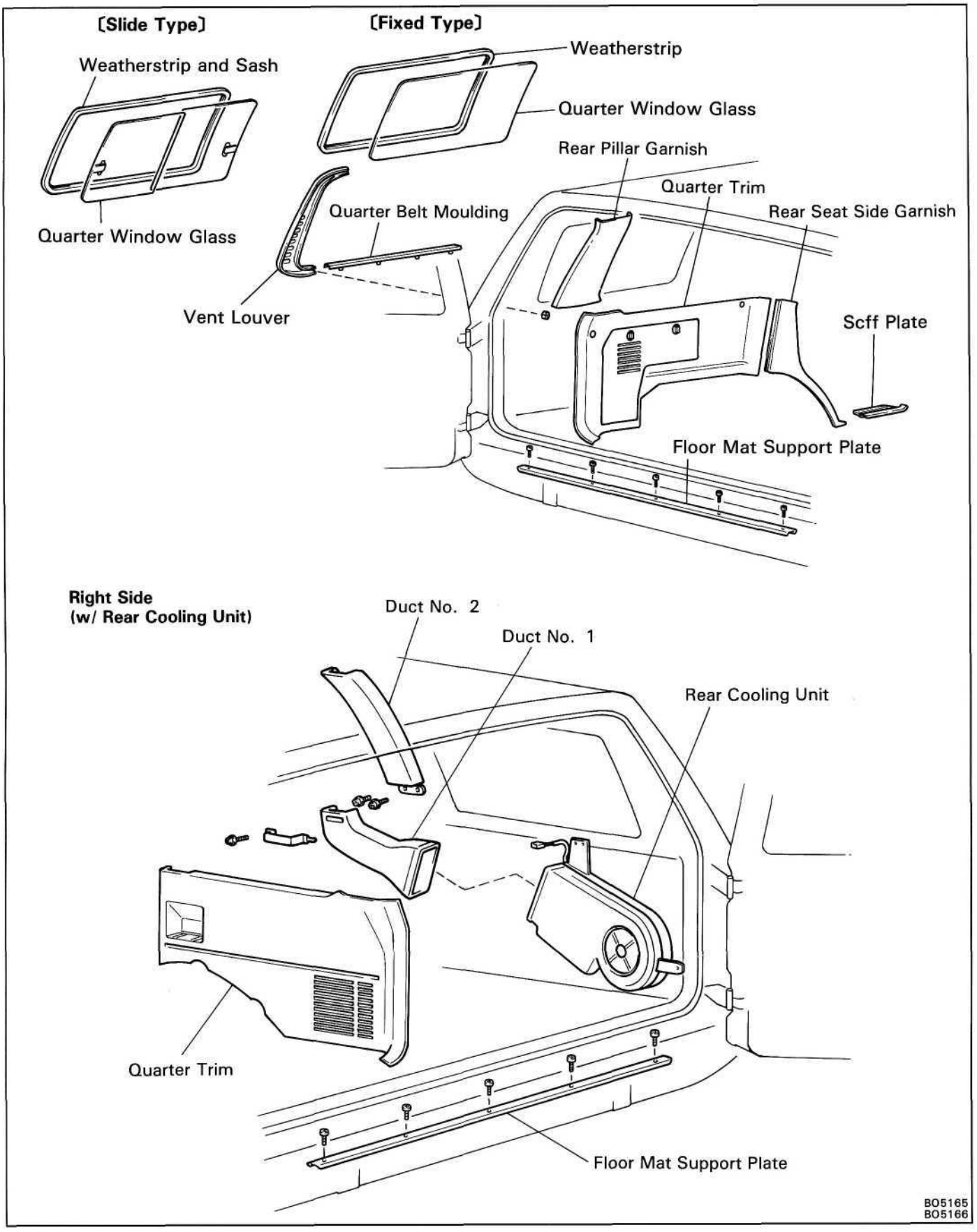

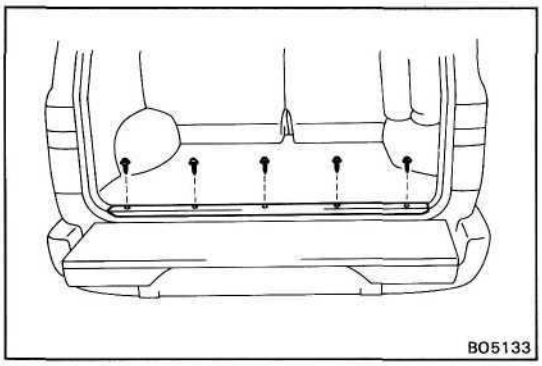

REMOVAL OF QUARTER WINDOW GLASS

(See page BO-62)

1. REMOVE FLOOR MAT SUPPORT PLATE

Remove five screws and the plate.

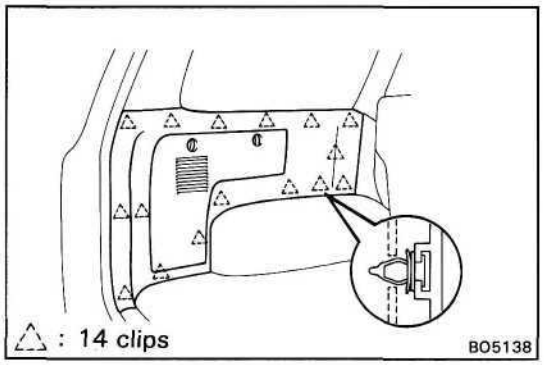

2. REMOVE QUARTER TRIM

(a) Insert a screwdriver between the retainers and quarter trim to pry it loose.

HINT: Tape the screwdriver tip before use.

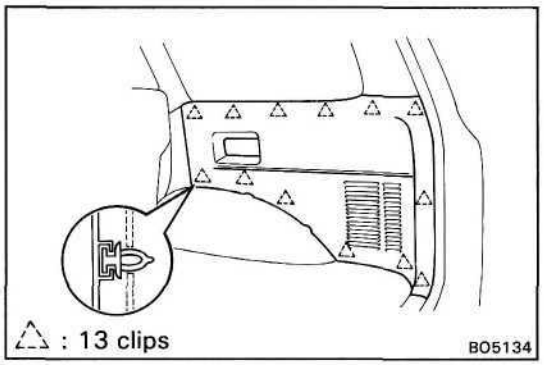

(b) (Right Side and w/ Rear Cooling Unit)

Insert a screwdriver between the retainers and quarter trim to pry it loose.

HINT: Tape the screwdriver tip before use.

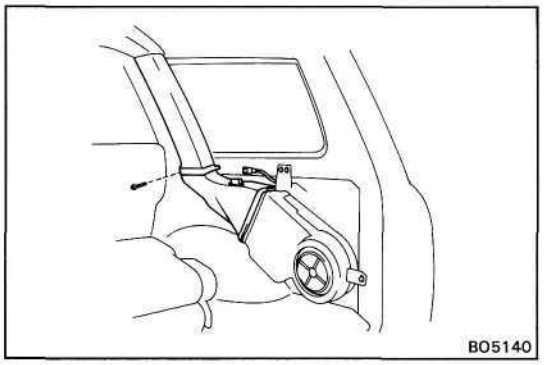

(c) Remove two screws and two ducts, then disconnect the connector.

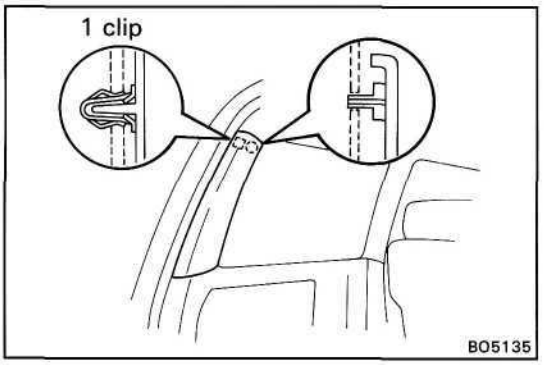

3. REMOVE REAR PILLAR GARNISH

Insert a screwdriver between the retainers and garnish to pry it loose.

HINT: Tape the screwdriver tip before use.

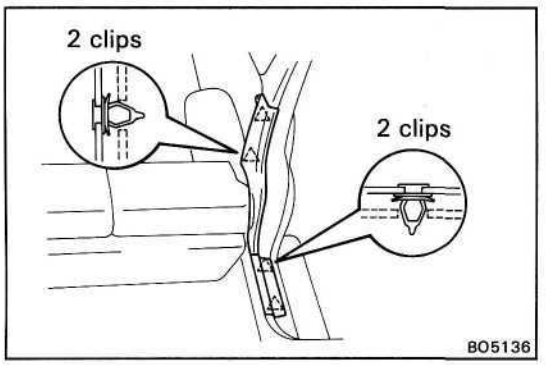

4. REMOVE REAR SEAT SIDE GARNISH AND SCFF PLATE

(a) Insert a screwdriver between the retainers and body to pry it loose.

HINT: Tape the screw driver tip before use.

(b) Pull out the side garnishe.

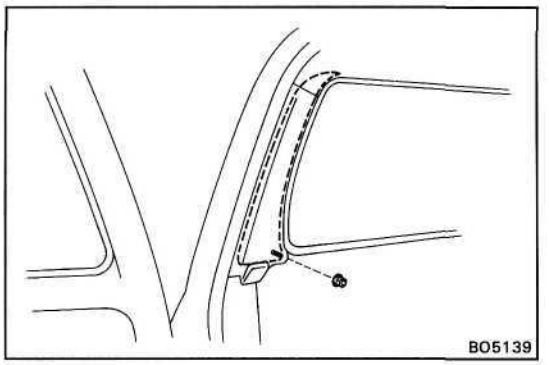

5. REMOVE VENT LOUVER AND QUARTER BELT MOULDING

(a) Remove the nut from the vent louver.

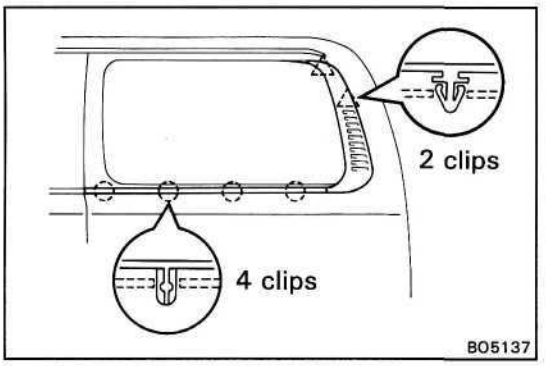

(b) Insert a screwdriver between the retainers of vent louver and body to pry it loose.

HINT: Tape the screwdriver tip before use.

(c) Remove the vent louver.

(d) Insert a screwdriver between the retainers of moulding and body.

HINT: Tape the screwdriver tip before use.

(e) Remove the moulding.

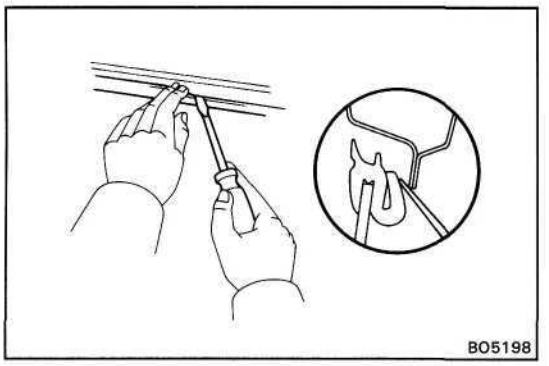

6. REMOVE QUARTER WINDOW GLASS

If reusing the weatherstrip:

(a) Using a screw driver, loosen the weatherstrip from the body.

NOTICE: Be careful not to damage the body.

(b) Pry the lip of the weatherstrip outward from the interior part of the body flange.

(c) Pull the glass outwards and remove it with the weatherstrip.

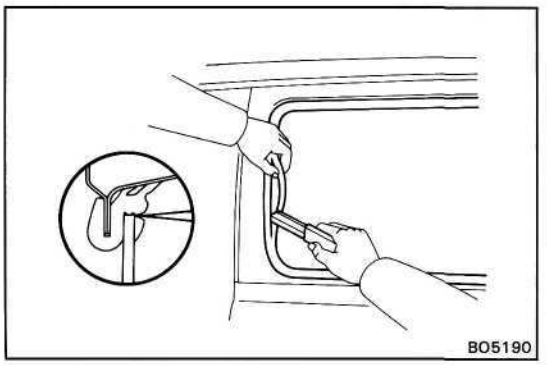

If using a new weatherstrip:

(a) From outside of the vehicle, cut off the weatherstrip lip with a knife.

(b) Push the quarter window glass outwards and remove the quarter window glass.

(c) Remove the remaining weatherstrip.

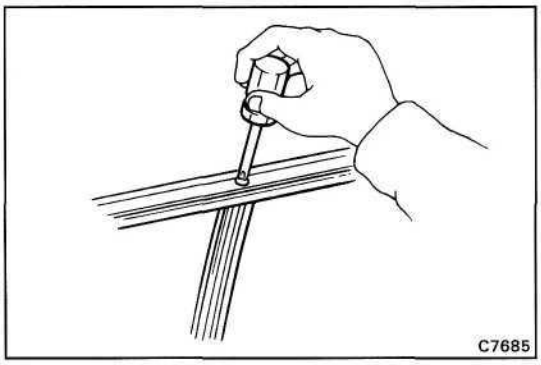

DISASSEMBLY OF QUARTER WINDOW GLASS

(See page BO-62)

(Slide Type)

1. REMOVE CENTER WEATHERSTRIP

Remove the screw and the weatherstrip.

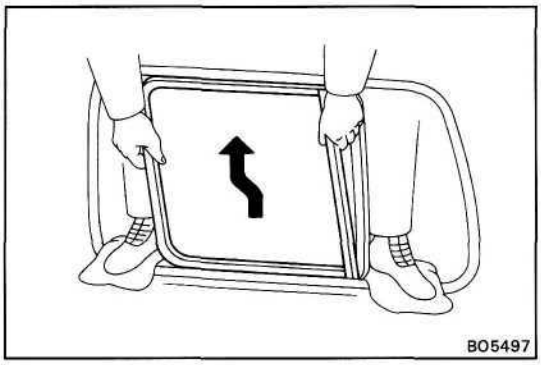

2. REMOVE GLASS

Pull up on the sash and remove the two glasses.

3. REMOVE QUARTER WINDOW RUN FROM SASH

4. REMOVE QUARTER WINDOW WEATHERSTRIP FROM SASH

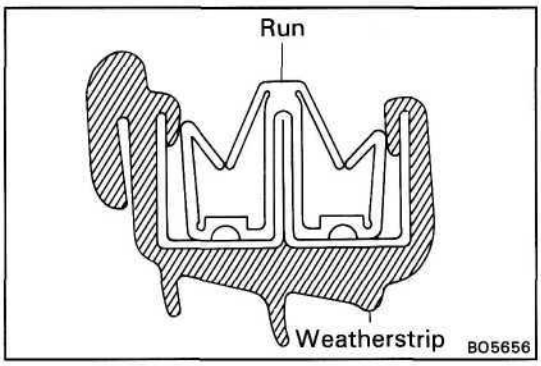

ASSEMBLY OF QUARTER WINDOW GLASS

(See page BO-62)

(Slide Type)

1. INSTALL QUARTER WINDOW WEATHERSTRIP ON SASH AS SHOWN

NOTICE: If the weatherstrip has hardened, it may develop leaks. Use a new one if possible.

2. INSTALL QUARTER WINDOW RUN AS SHOWN

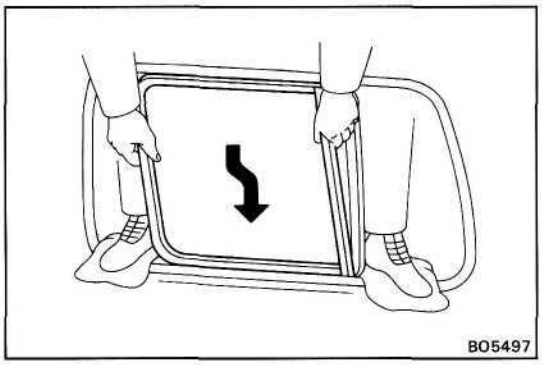

3. INSTALL QUARTER WINDOW GLASS

Pull up on the sash and install the two glasses.

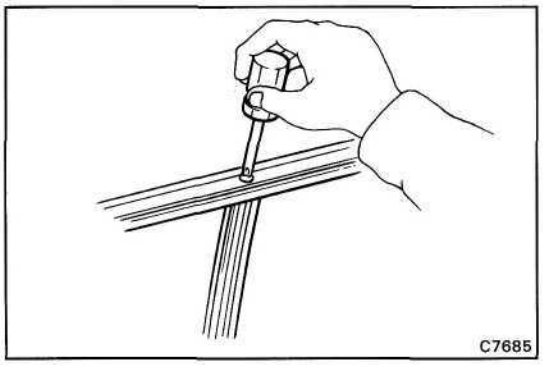

4. INSTALL CENTER WEATHERSTRIP

Install the weatherstrip with the screw.

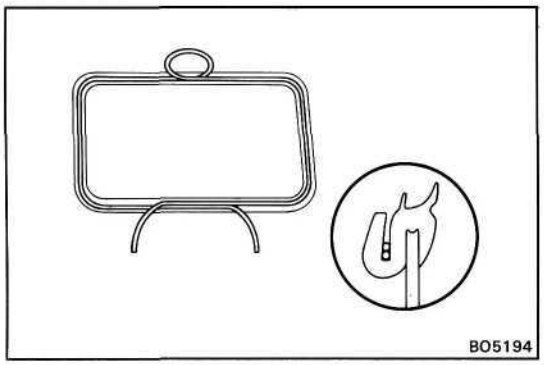

INSTALLATION OF QUARTER WINDOW GLASS

(See page BO-62)

1. INSTALL WEATHERSTRIP ON GLASS

(a) Attach the weatherstrip to the glass.

NOTICE: If the weatherstrip has hardened, it may develop leaks. Use a new one if possible.

(b) Insert a cord into the groove of the weatherstrip all the way around with the ends overlapping.

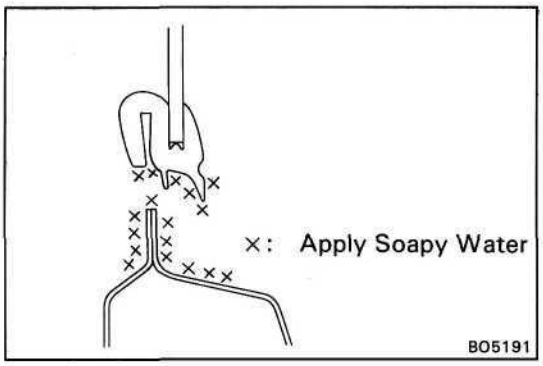

2. INSTALL QUARTER WINDOW GLASS

(a) Apply soapy water to the contact surface of the weatherstrip lip and to the body flange.

HINT: Begin installation in the middle of the lower part of the quarter window glass.

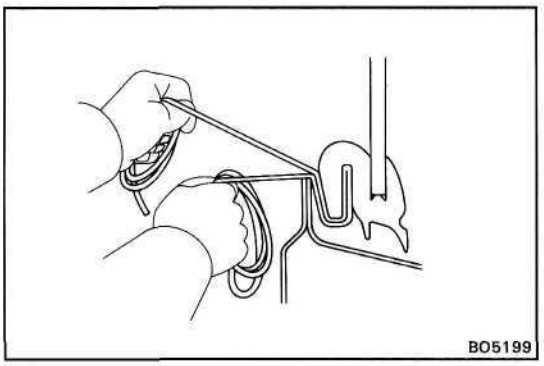

(b) Hold the glass in position on the body.

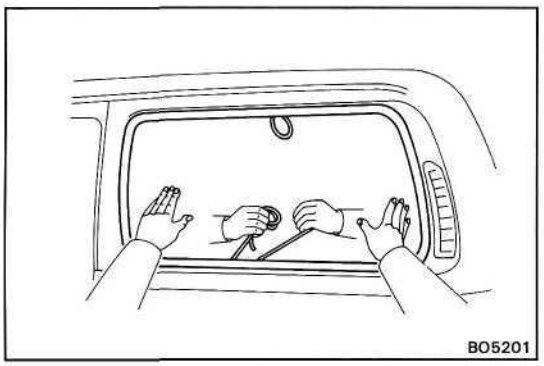

(c) From the inside, pull on one cord at an angle so it pulls the lip over the flange. From the outside, press the glass along the weatherstrip until the glass is installed.

3. SNUG DOWN GLASS

To snug down the glass, tap from the outside with your open hand.

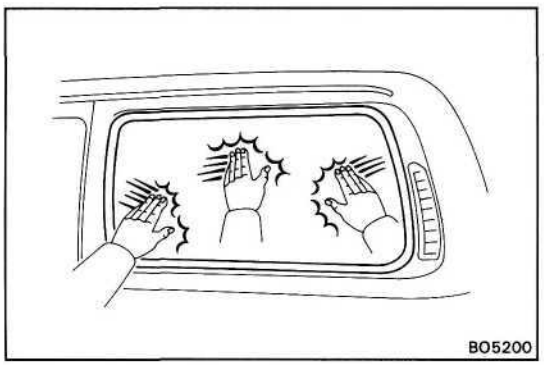

4. INSPECT FOR LEAKS AND REPAIR

(See step 7 on page BO-61)

5. INSTALL FOLLOWING PARTS:

- Pillar garnishes
- Quarter trim
- Floor mat support plate
- Air ducts
- Side garnishes and scuff plate

BACK DOOR GLASS

PREPARE ITEMS LISTED

(See page BO-57)

COMPONENTS

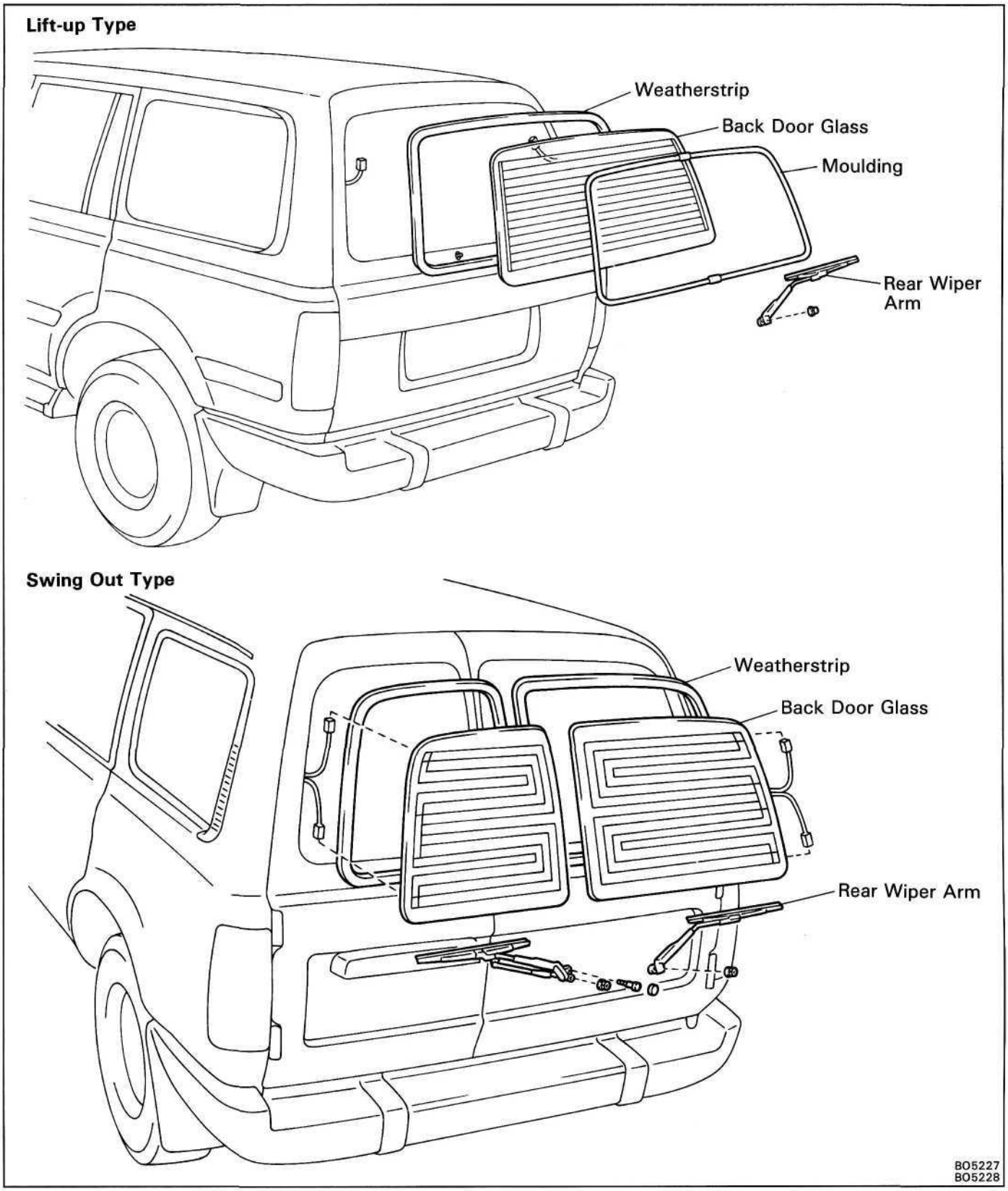

REMOVAL OF BACK DOOR GLASS

1. **REMOVE REAR WIPER ARM**

2. **(w/ Defogger)**
   REMOVE DEFOGGER CONNECTOR
   Disconnect the connector from the glass.

3. **(w/ Back Door Moulding) Lift-up Type**
   REMOVE BACK DOOR MOULDING
   (See page BO-48)

4. **REMOVE BACK DOOR GLASS**
   HINT: Remove the glass in the same manner as the windshield.
   (See step 6 on page BO-58)

INSTALLATION OF BACK DOOR GLASS

1. **CLEAN BODY AND GLASS**
   (See step 1 on page BO-59)

2. **INSTALL WEATHERSTRIP ON GLASS**
   (See step 2 on page BO-59)

3. **INSTALL BACK DOOR GLASS**
   HINT: Install the glass in the same manner as the windshield.
   (See step 3 on page BO-59)

4. **SNUG DOWN GLASS**
   (See step 4 on page BO-60)

5. **APPLY ADHESIVE**
   (See step 5 on page BO-60)

6. **CLEANING SEALER SURFACE**
   (See step 6 on page BO-60)

7. **INSPECT FOR LEAKS AND REPAIR**
   (See step 7 on page BO-61)

8. **(w/ Back Door Moulding)**
   INSTALL BACK DOOR MOULDING
   (See page BO-48)

9. **(w/ Defogger)**
   INSTALL DEFOGGER CONNECTOR
   Connect the connector to the glass.

10. **INSTALL REAR WIPER ARM**

MOON ROOF

COMPONENTS

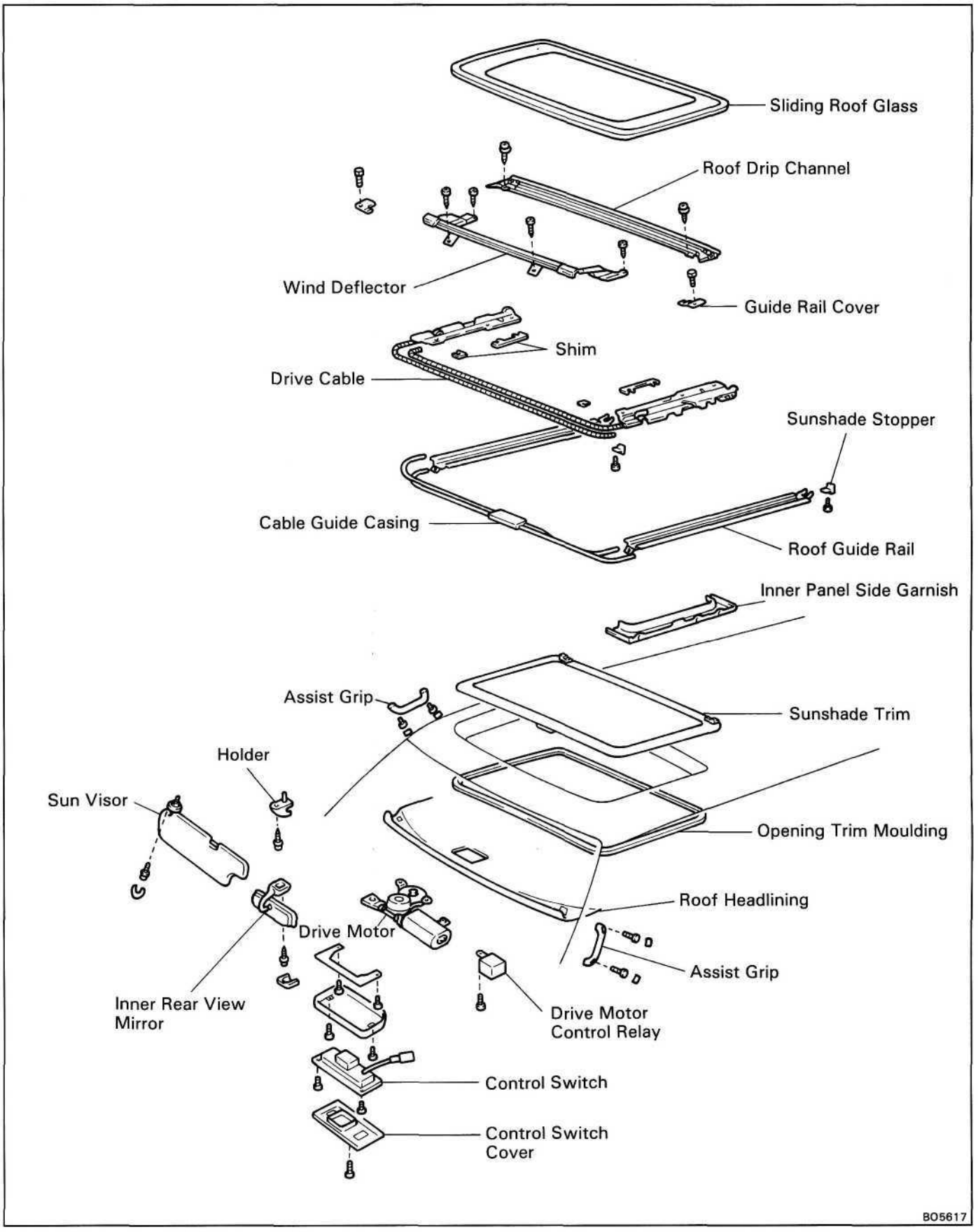

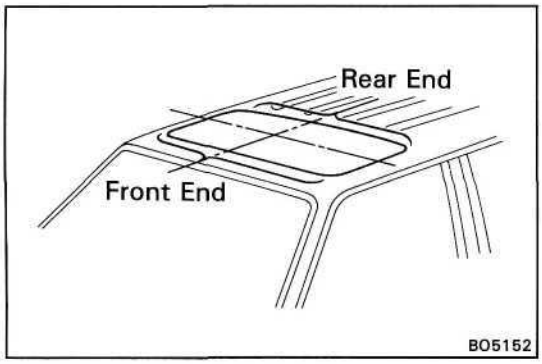

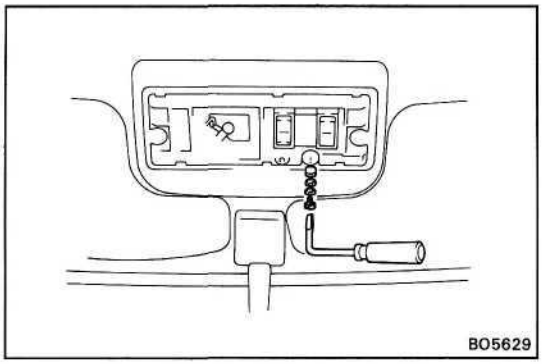

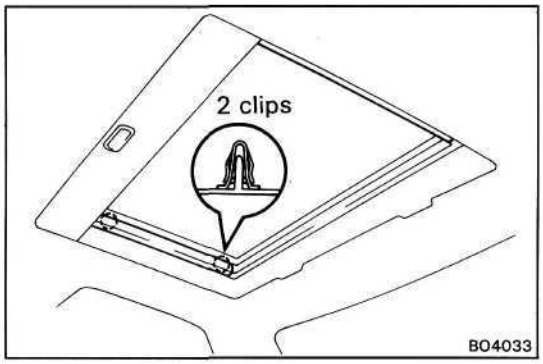

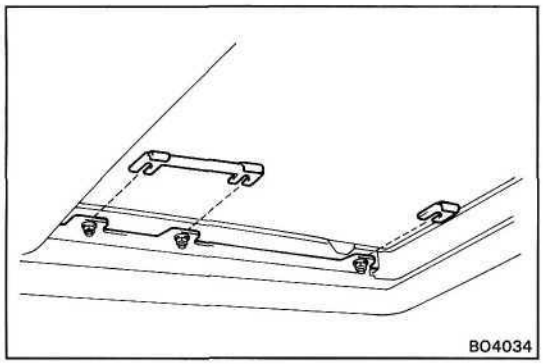

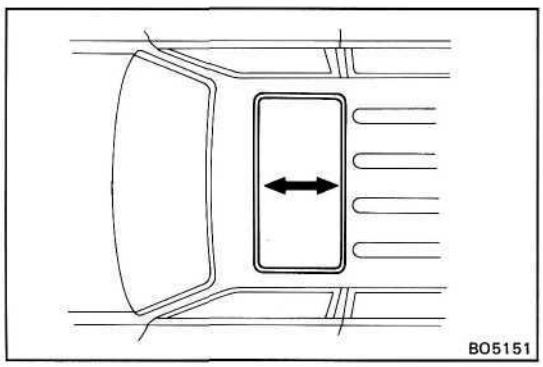

ON-VEHICLE INSPECTION

INSPECT SLIDING ROOF PANEL ALIGNMENT

(a) Start the engine and check the operation time of the sliding roof.

Operation time: Approx. 5 sees.

(b) Check for abnormal noise or binding during operation.

(c) With the sliding roof fully closed, check for water leakage.

(d) Check for a difference in level between the sliding root glass and roof panel.

Front side: 1.9 + 2.0 mm (0.075 + 0.079 in.)
-1.0 -0.039

Rear side: 1.9 + 2.0 mm (0.075 + 0.079 in.)
-1.0 -0.039

If the sliding roof does not operate:

(e) Remove the control switch cover.

(f) Remove the large screw inside.

NOTICE: Be careful not to lose the spring washer or shim.

(g) Manually operate the moon roof by inserting a special crank-shaped screwdriver into the hole and turning the drive shaft.

ADJUSTMENT OF SLIDING ROOF

1. REMOVE SLIDING ROOF GARNISHES

Before making adjustments, remove the left and right sliding roof garnishes.

HINT: After adjustment, reinstall the sliding roof garnishes.

2. TO ADJUST LEVEL DIFFERENCE

Adjust by increasing or decreasing the number of shims between the bracket and slinding roof.

3. TO ADJUST FORWARD OR REARWARD

(a) Adjust by loosening the sliding roof installation nuts, and move the sliding roof bracket forward and backward.

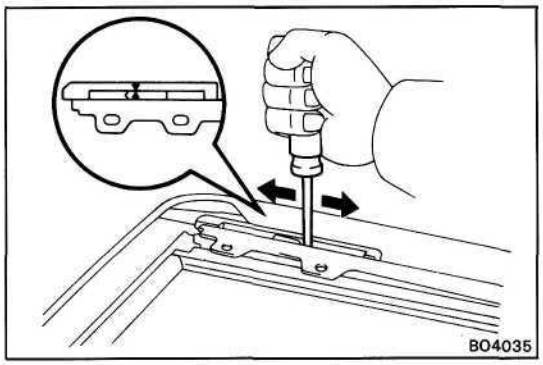

(b) When the front or rear alignment is not correct, remove the glass and adjust the drive rail.

(c) Using a screwdriver, slide the link forward or backward to align the two marks as shown.

(d) Slide the bracket to the forefront with yout hand.

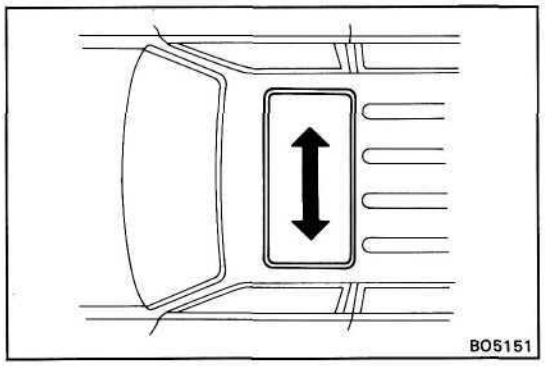

4. TO ADJUST RIGHT OR LEFT

Adjust by loosening the sliding roof rear shoe installation nuts, and move the sliding roof to the right and left.

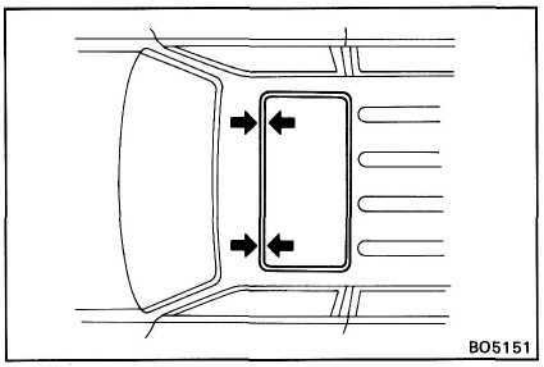

5. TO ADJUST CLEARANCE
(Difference in left and rigth clearance)

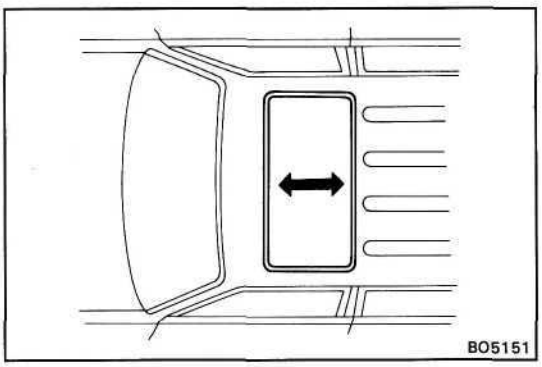

Adjust by loosening the sliding roof installation nuts and readjust the sliding roof to the proper position.

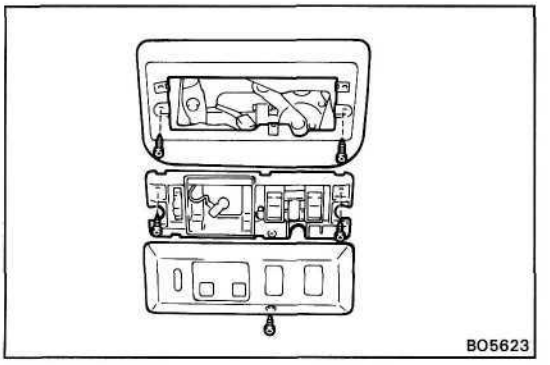

REMOVAL OF MOON ROOF

(See page BO-69)

1. DISCONNECT BATTERY CABLE FROM NEGATIVE TERMINAL

2. REMOVE CONTROL SWITCH

(a) Remove the screw and switch cover.

(b) Remove two screws and switch body, then disconnect the connector.

(c) Remove two screws and bracket.

3. REMOVE FOLLOWING PARTS:

- Assist grips
- Sun visors and holders
- Inner rear view mirror
- Opening trim moulding

4. PULL DOWN FRONT SLIDE OF ROOF HEADLINING

Pull down the headlining by hand.

NOTICE: Do not damage the roof headlining.

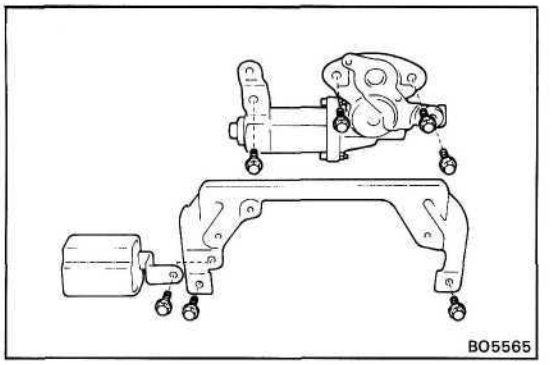

5. REMOVE DRIVE GEAR ASSEMBLY

(a) Remove the bolt and the moon roof control relay, then disconnect the connector.

(b) Remove two bolts and the braket.

(c) Remove four bolts and the gear assembly, then disconnect the connector.

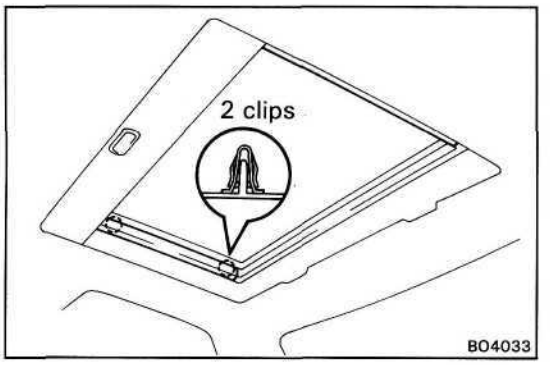

6. REMOVE SLIDING ROOF GARNISHES

Using a screwdriver, pry loose two clips and remove the inner panel side garnish.

HINT: Tape the screwdriver tip before use.

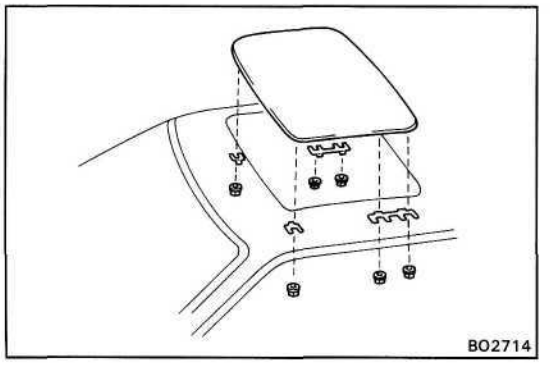

7. REMOVE SLIDING ROOF GLASS

(a) Remove six nuts and shims.

HINT: Make sure of the number of shims.

(b) Pull the glass upward to remove it.

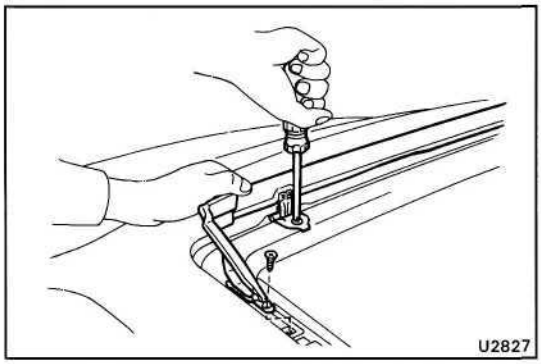

8. REMOVE WIND DEFLECTOR

Remove four screws and the wind deflector.

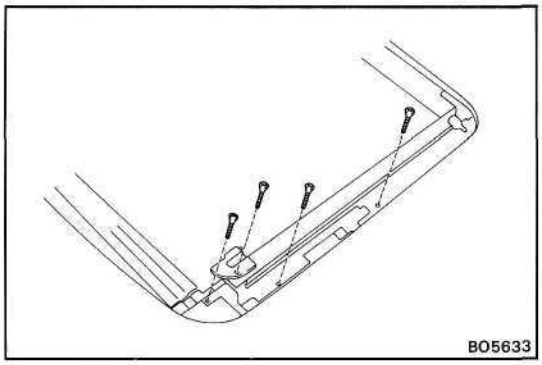

9. REMOVE CABLE GUIDE CASING

(a) Remove the screw and the guide rail cover.

(b) Remove three screws from the drive rail.

(c) Slide the drive cable forward.

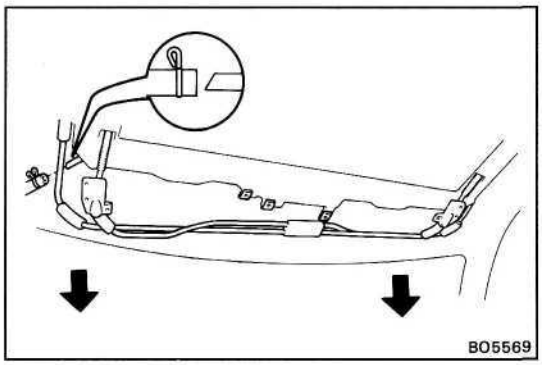

(d) Disconnect front side of the drain hose.

HINT: Disconnect the drain hose from the sliding roof housing side.

(e) Remove the cable guide casing gradually from both sides.

NOTICE: Be careful that the oily cable doesn't fall off.

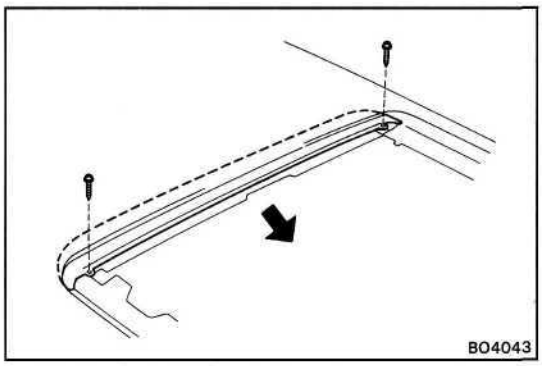

10. REMOVE ROOF DRIP CHANNEL

(a) Remove two screws.

(b) Pull the channel forward to remove it.

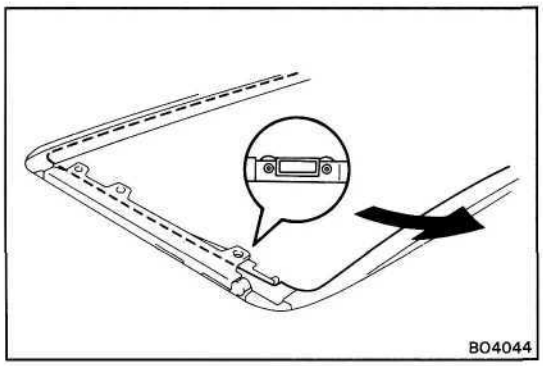

11. REMOVE SUNSHADE TRIM

While raising the drive rail, pull the trim forward to remove it.

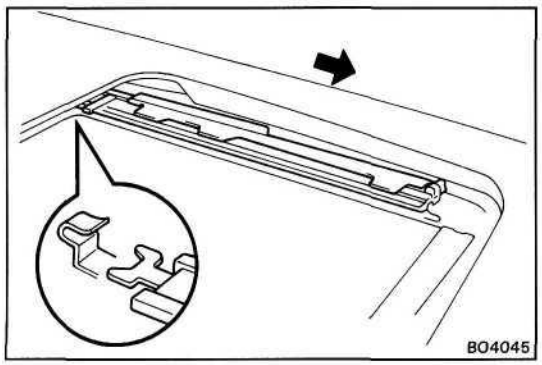

12. REMOVE DRIVE RAIL

(a) Slide the drive cable forward.

(b) Slide the rail forward and disconnect the clamp, then remove it.

INSTALLATION OF SLIDING ROOF

(See pages BO-69)

1. INSTALL FOLLOWING PARTS:

(a) Drive rail

(b) Sunshade trim

(c) Roof drip channel

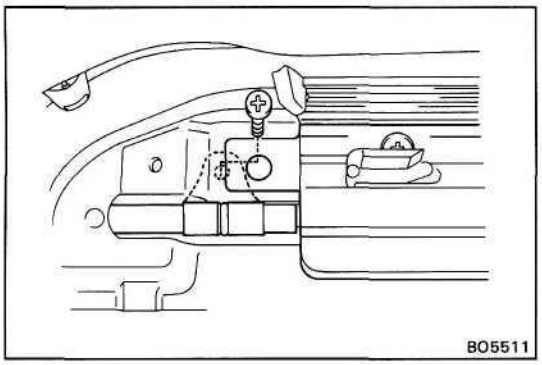

2. INSTALL CABLE GUIDE CASING

(a) Insert the cable to the casing and install the cable guide casing gradually to both sides.

(b) Insert the casing to the drive rail as shown.

(c) Connect the front side of drain hose.

HINT: Place the knobs of clips to upper side.

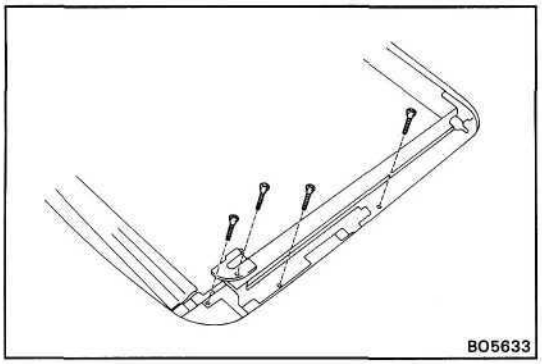

(d) Install three screws to the drive rail.

(e) Install the screw and the guide rail cover.

3. INSTALL WIND DEFLECTOR

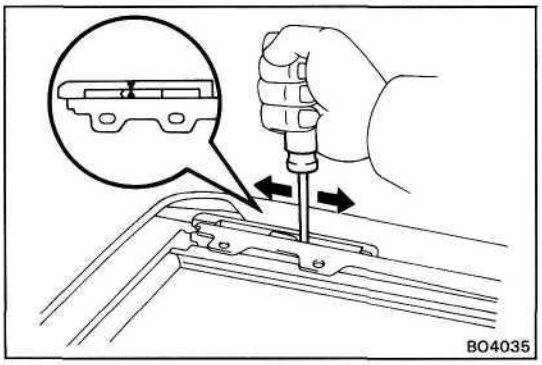

4. ADJUST DRIVE RAIL

HINT: Adjust the drive rail to a closed and tilted down position

(a) Using a screwdriver, slide the link forward or backward to align the two marks as shown.

(b) Slide the bracket to the forefront with your hand.

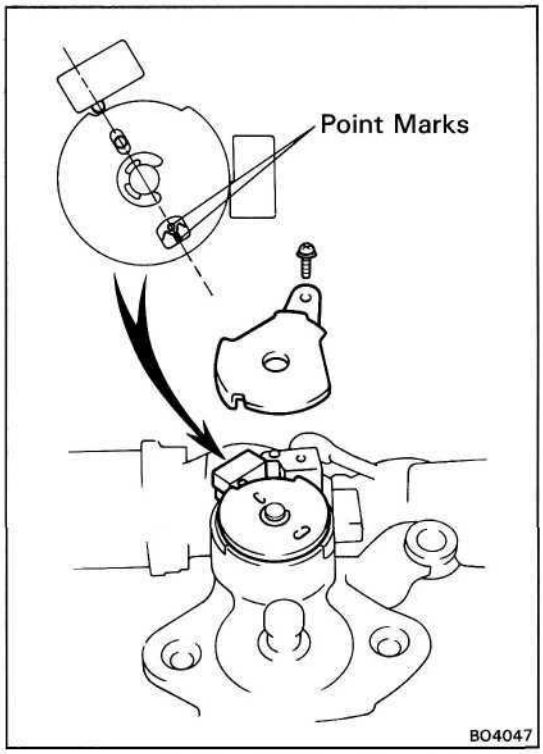

5. **ADJUST AND INSTALL DRIVE GEAR ASSEMBLY**
   (a) Remove the screw and cam plate cover.
   (b) Remove the large screw, washers and shims.
   (c) Turn the drive shaft by screwdriver to align the housing and gear point mark as shown.
   (d) Install cam plate cover with a screw.
   (e) Install the drive gear assembly with four bolts.
   (f) Connect the connectors.

6. **INSTALL MOON ROOF CONTROL RELAY AND BRACKET**
   (a) Install the bracket with two bolts.
   (b) Install the moon roof control relay with a bolt, then connect the connector.

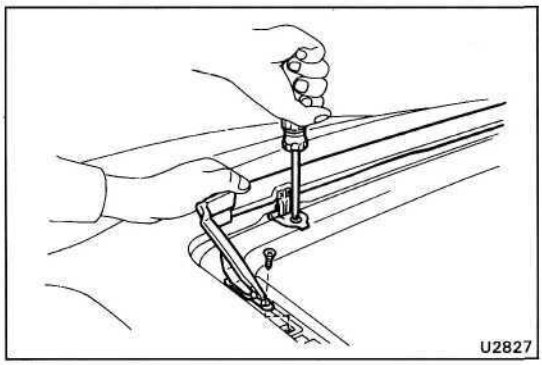

7. **INSTALL WIND DEFLECTOR**
   Install the wind deflector with four screws.

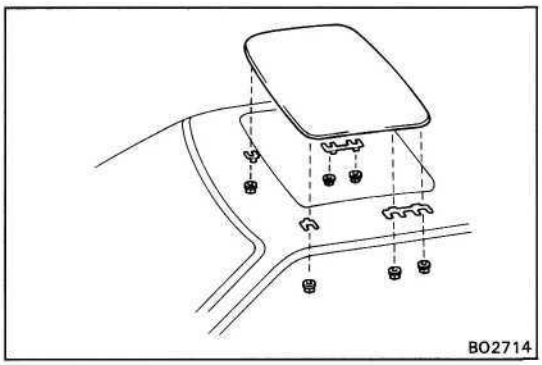

8. **INSTALL SLIDING GLASS**
   HINT:
   - Confirm that the lip part of the weatherstrip housing is not twisted.
   - Confirm that the clearance between the left and right of the sliding roof glass and roof panel are equal.

   Install six nuts and shims.

9. **INSPECT SLIDING ROOF GLASS ALIGNMENT**
   (See page BO-70)

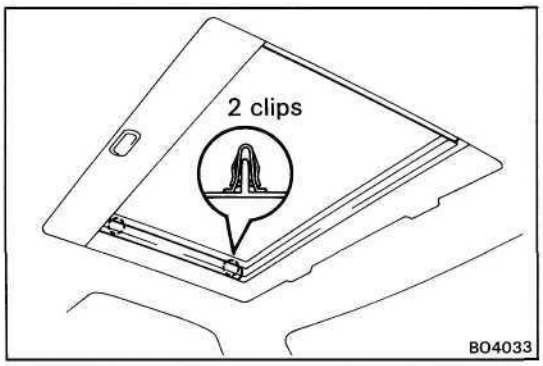

10. **INSTALL SLIDING ROOF GARNISH**
    Install the inner panel side garnish with retainers to the sliding roof glass by tapping.

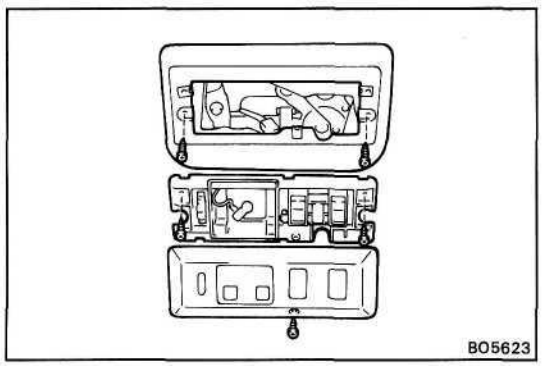

11. INSTALL CONTROL SWITCH

(a) Install the bracket with two screws.

(b) Install the switch body with two screws, then connect the connector.

(c) Install the switch cover with the screw.

12. INSTALL FOLLOWING PARTS:

- Assist grips
- Sun visors and holders
- Inner rear view mirror
- Opening trim moulding

13. CONNECT BATTERY CABLE TO NEGATIVE TERMINAL

14. CHECK OPERATION TO THE MOON ROOF

INSTRUMENT PANEL

COMPONENTS

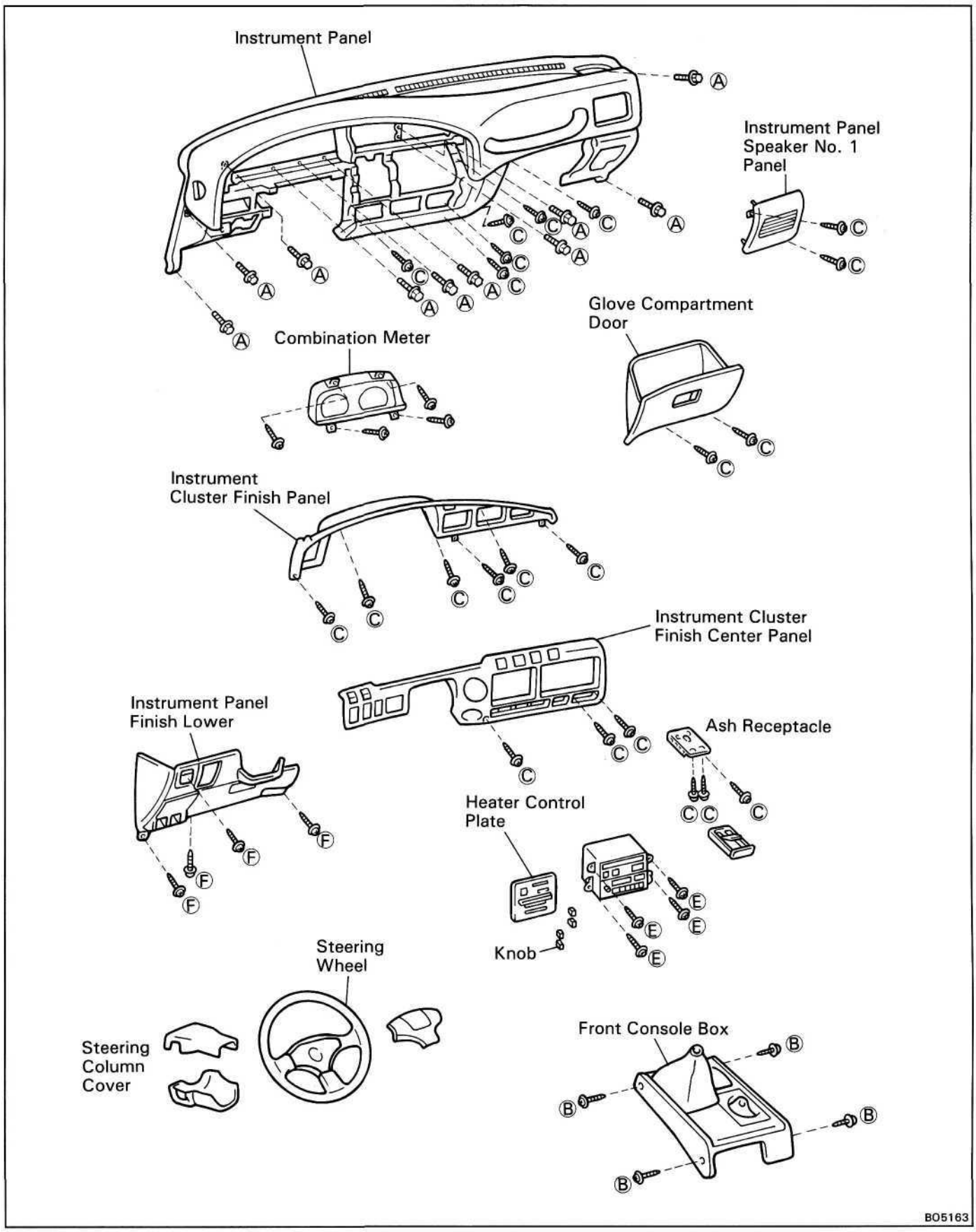

HINT: Screw sizes in the previous illustration are indicated according to the code below.

mm (in.)

Code	Shape	Size	Code	Shape	Size	Code	Shape	Size
A		ϕ=6 (0.24) L=25 (0.98)	B		ϕ=5 (0.20) L=25 (0.98)	C		ϕ=5.22 (0.2055) L=14 (0.55)
D		ϕ=8 (0.31) L=30 (1.18)	E		ϕ=5 (0.20) L=16 (0.62)	F		ϕ=5.22 (0.2055) L=18 (0.70)

BO5168

REMOVAL OF INSTRUMENT PANEL

(See page BO-77)

1. **DISCONNECT BATTERY CABLE FROM NEGATIVE TERMINAL**

2. **REMOVE STEERING WHEEL**
   (See page SR-4)

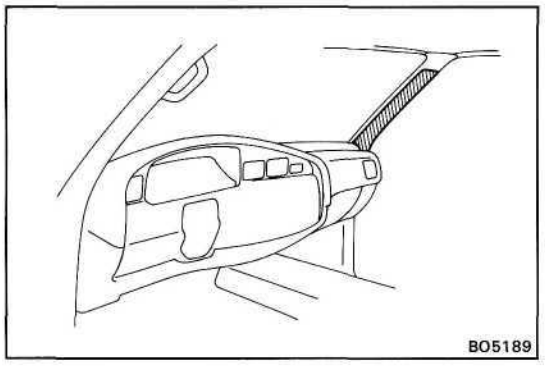

BO5189

3. **APPLY PROTECTION TAPE**

   Before removing the instrument panel, apply protection tape to the pillars.

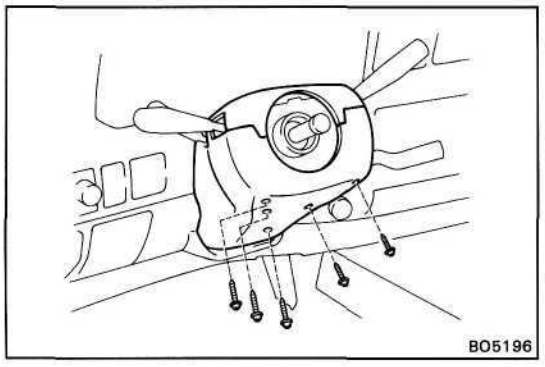

BO5196

4. **REMOVE STEERING COLUMN COVER**

   Remove five screws and the column covers.

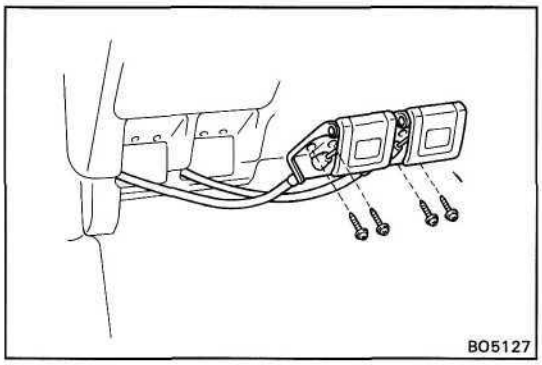

5. REMOVE ENGINE HOOD AND FUEL LID RELEASE LEVER

Remove four screws and the levers.

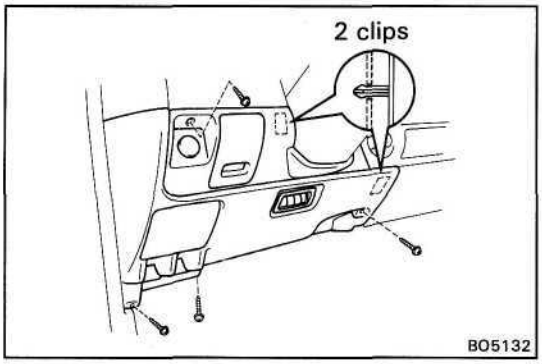

6. REMOVE LOWER FINISH PANEL

Remove four screws and the panel.

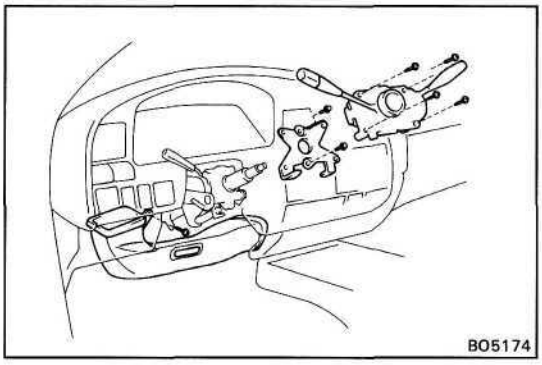

7. REMOVE DUCT HEATER TO REGISTER NO.2

Remove the screw and the duct.

8. REMOVE COMBINATION SWITCH

Remove four screws and the combination switch then disconnect the connectors.

9. REMOVE TURN SIGNAL BRACKET

Remove two bolts and the bracket.

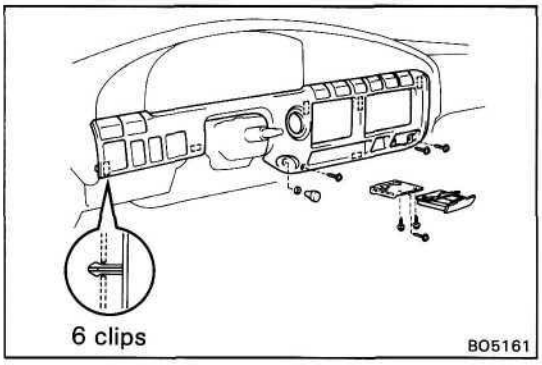

10. REMOVE INSTRUMENT CLUSTER FINISH CENTER PANEL

(a) (w/ Manual choke)
Remove the choke nobe by pulling.

(b) Remove the ashtry.

(c) Remove three screws and ash receptacle.

(d) Remove the instrument cluster finish center panel then disconnect the connectors.

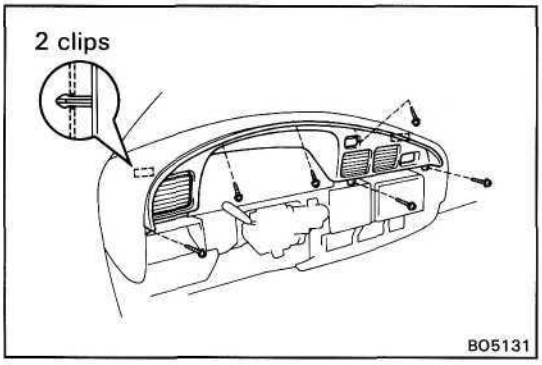

11. REMOVE INSTRUMENT CLUSTER FINISH PANEL

Remove six screws and the instrument cluster finish panel.

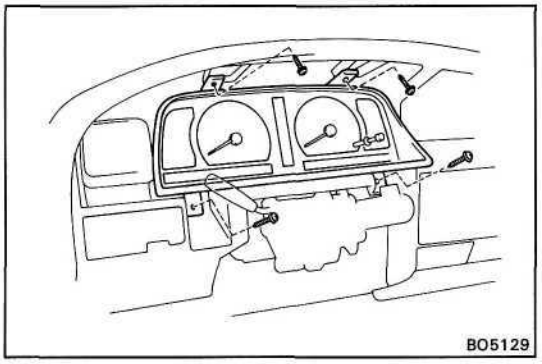

12. REMOVE COMBINATION METER

(a) Remove four screws.

(b) Disconnect the connectors and the speed meter cable, and remove the meter.

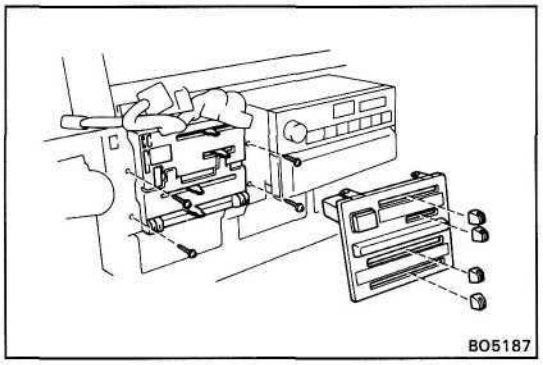

13. REMOVE HEATER CONTROL UNIT

(a) Remove four nobes and the name plate.

(b) Remove four screws and hang the heater control unit.

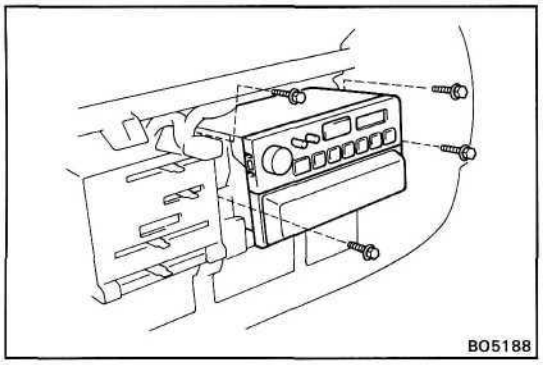

14. REMOVE RADIO

Remove four bolts and the radio then disconnect the connectors.

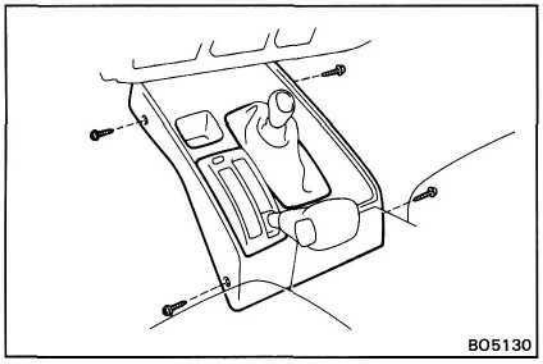

15. **REMOVE FRONT CONSOL BOX**

Remove four screws and the consol box.

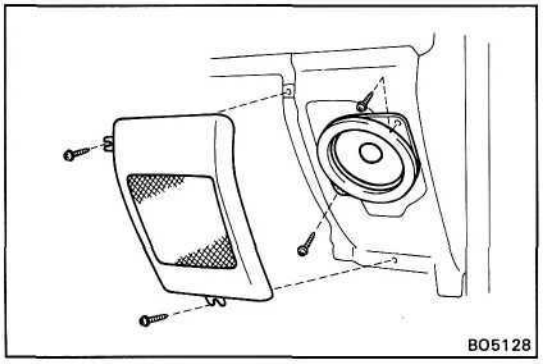

16. REMOVE INSTRUMENT PANEL SPEAKER

(a) Remove two screws and the speaker No.1 panel.

(b) Remove two screws and speaker, then disconnect the connector.

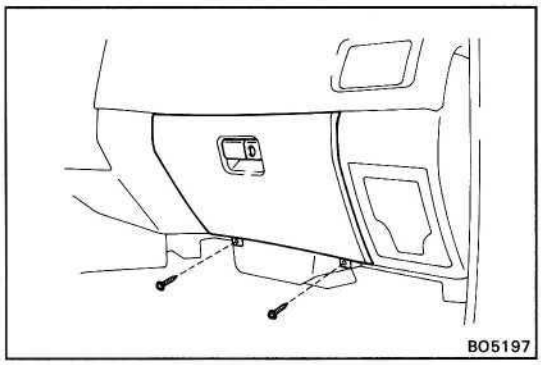

17. REMOVE GLOVE COMPARTMENT DOOR

Remove two screws and the compartment door.

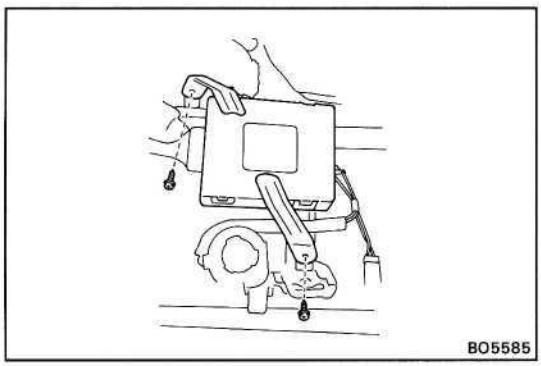

18. **REMOVE ENGINE** ECU

Remove two screws and the ECU, then disconnect the connecter.

19. REMOVE INSTRUMENT PANEL

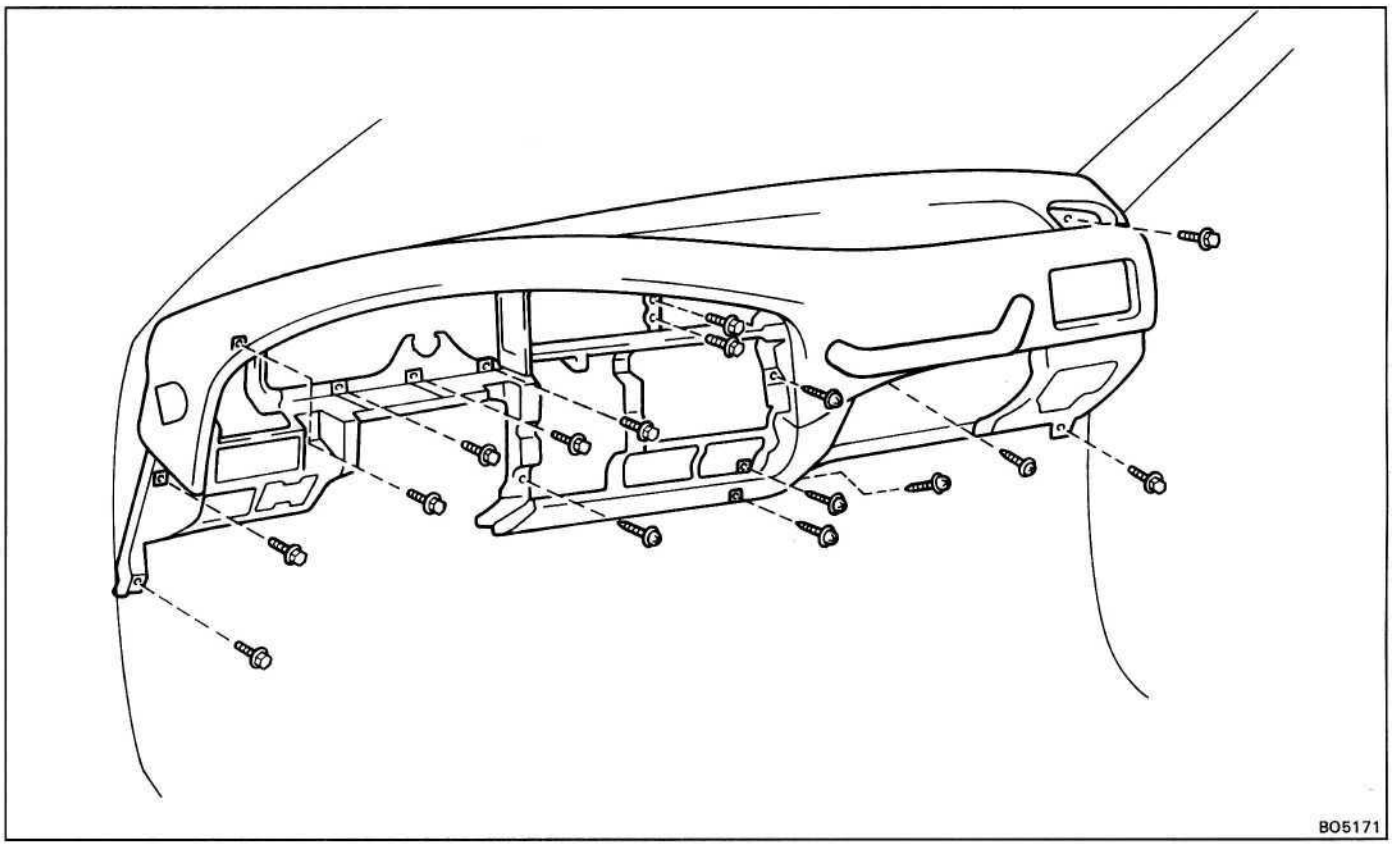

Remove ten bolts, six screws and the instrument panel.

20. REMOVE FOLLOWING PARTS FROM INSTRUMENT PANEL

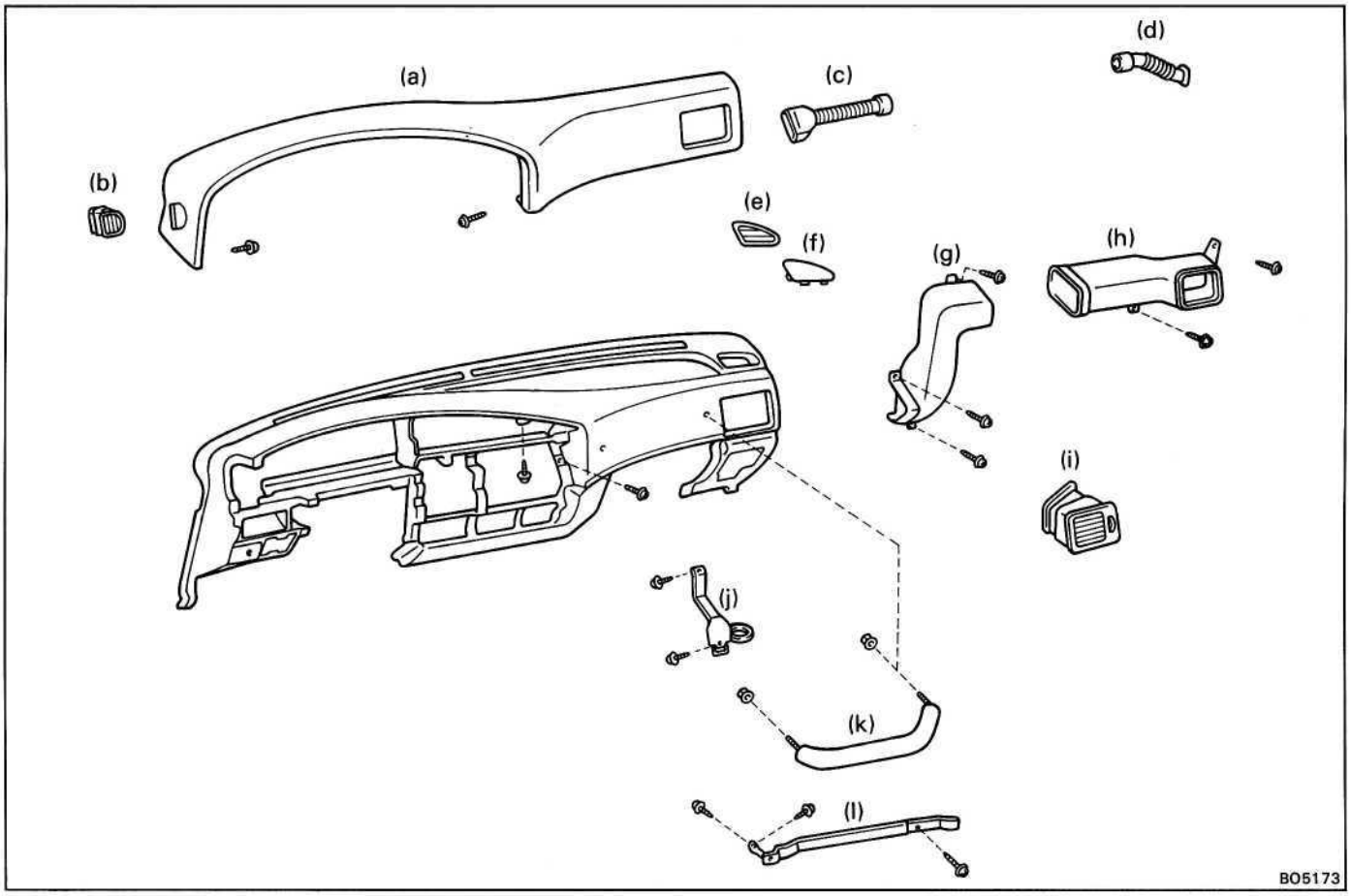

(a) Safety Pad
(b) Side Defroster No. 1 Nozzle
(c) Side Defroster Nozzle No.1 Duct
(d) Side Defroster Nozzle No.2 Duct
(e) Side Defroster No.2 Nozzle
(f) Defroster Nozzle Plate
(g) No.4 Heater Register Duct
(h) No.5 Heater Register Duct
(i) Instrument Panel No.2 Register
(j) Glove Compartment Door Lock Striker Plate
(k) Assist Grip
(l) Glove Compartment Door Reinforcement

INSTALLATION OF INSTRUMENT PANEL

(See page **BO-77)**

INSTALL INSTRUMENT PANEL PARTS FOLLOWING REMOVAL SEQUENCE IN REVERSE

SEAT

Front Seat

COMPONENTS

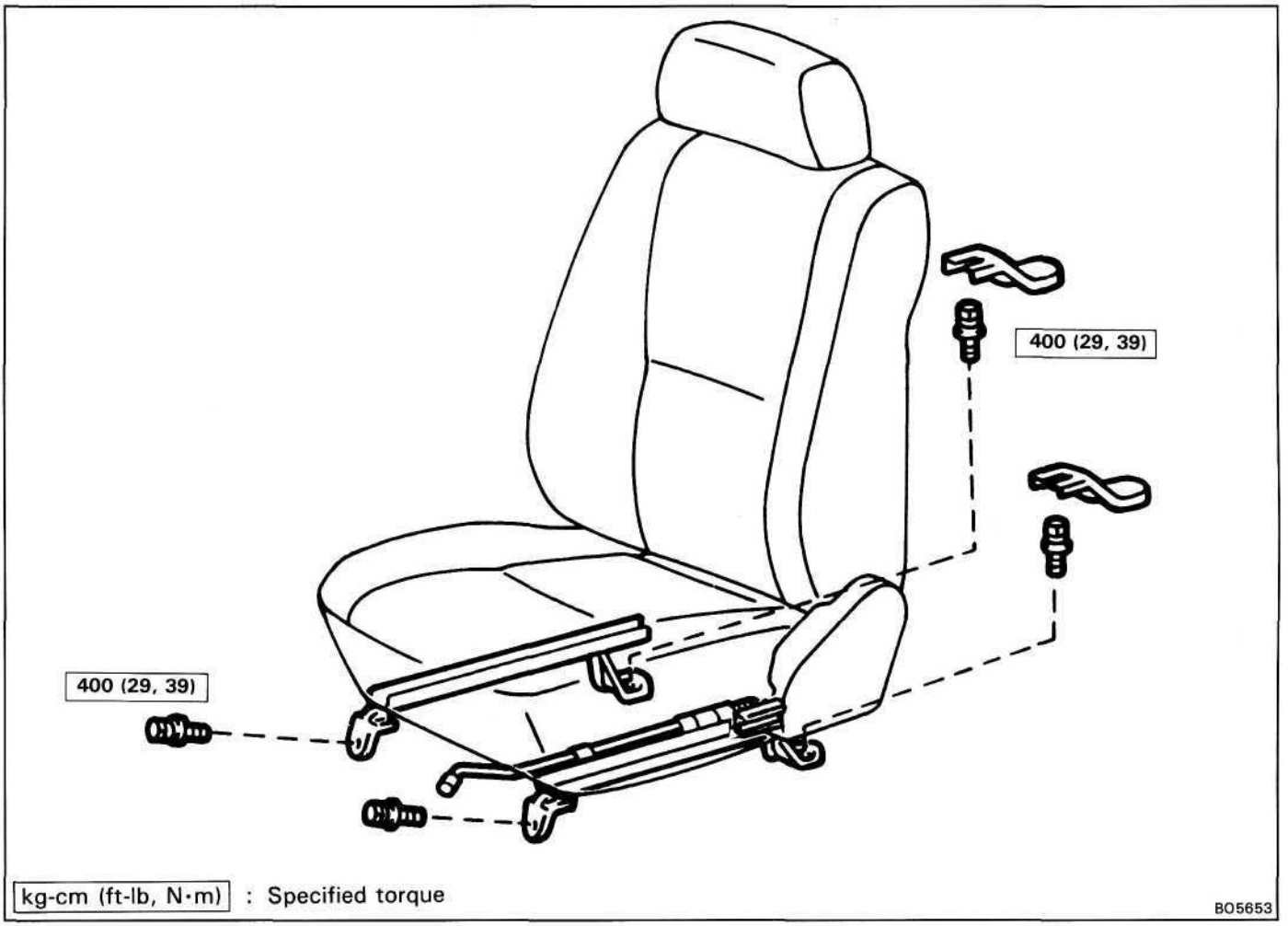

Second Seat

COMPONENTS

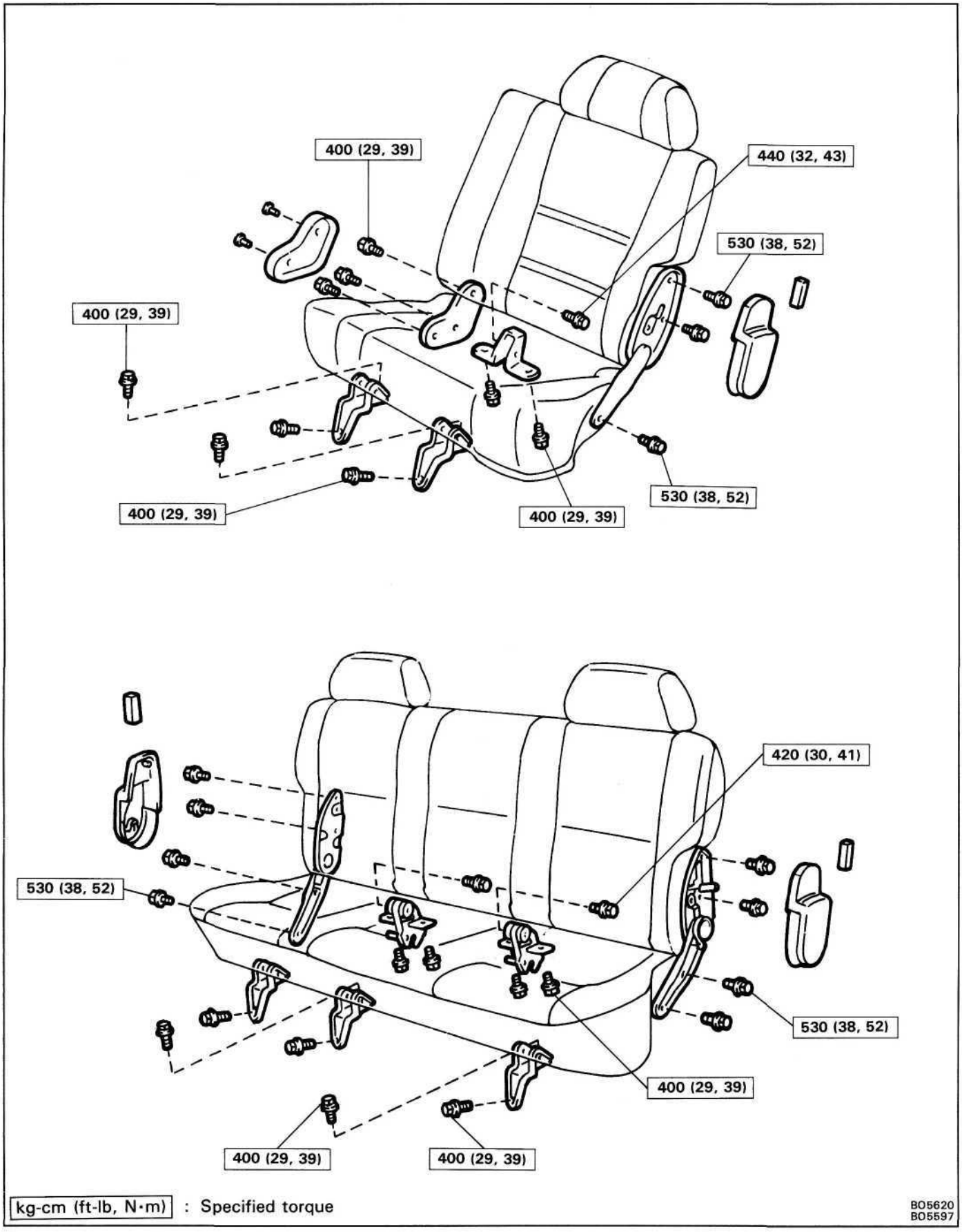

kg-cm (ft-lb, N·m) : Specified torque

BO5620
BO5597

Third Seat

COMPONENTS

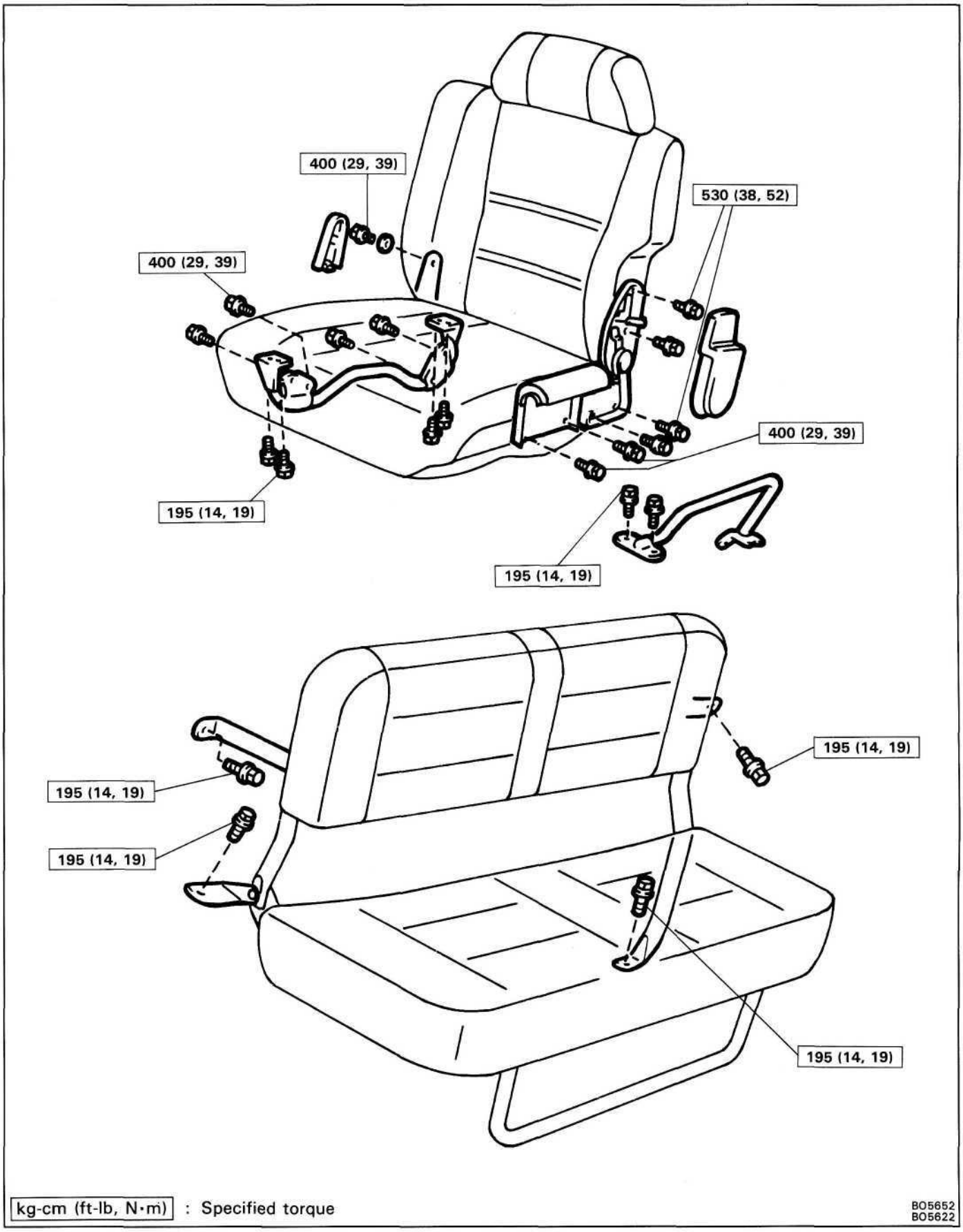

kg-cm (ft-lb, N·m) : Specified torque

BO5652
BO5622

SEAT BELTS

Front Seat Belts

COMPONENTS

ELR Type
Separate Seat

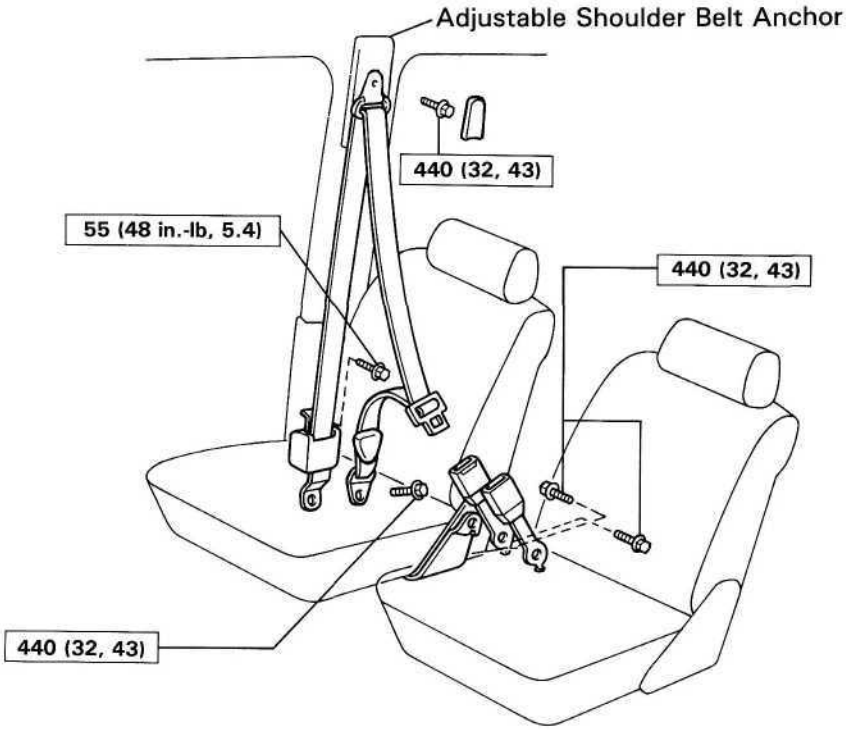

ELR Type
Separate Seat

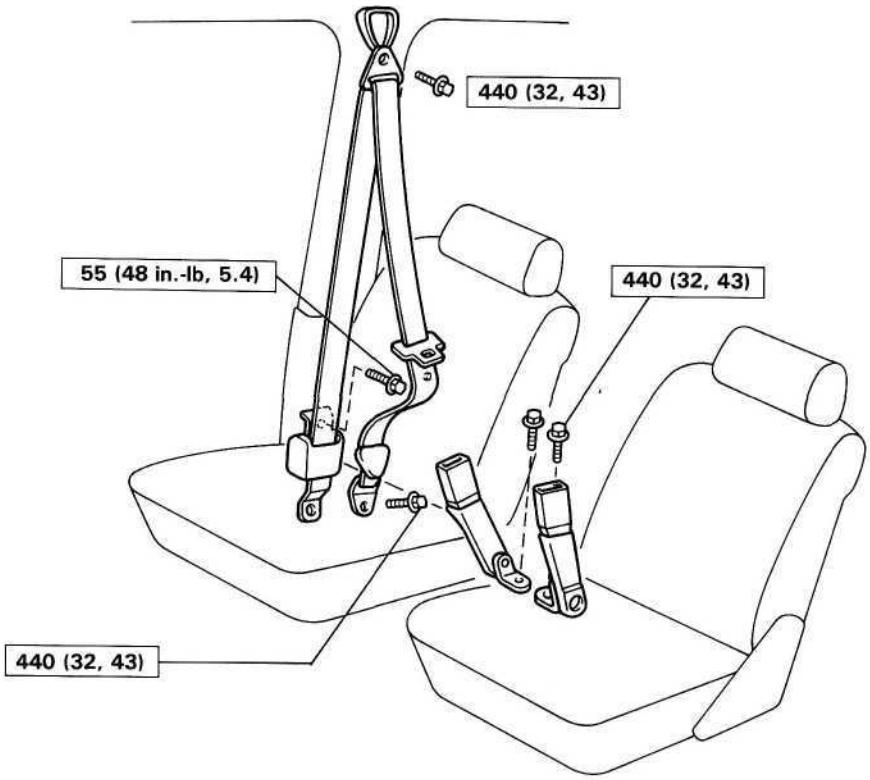

kg-cm (ft-lb, N·m) : Specified torque

BO5212
BO5645

COMPONENTS (Cont'd)

ELR and Manual Type
Separate and bench seat

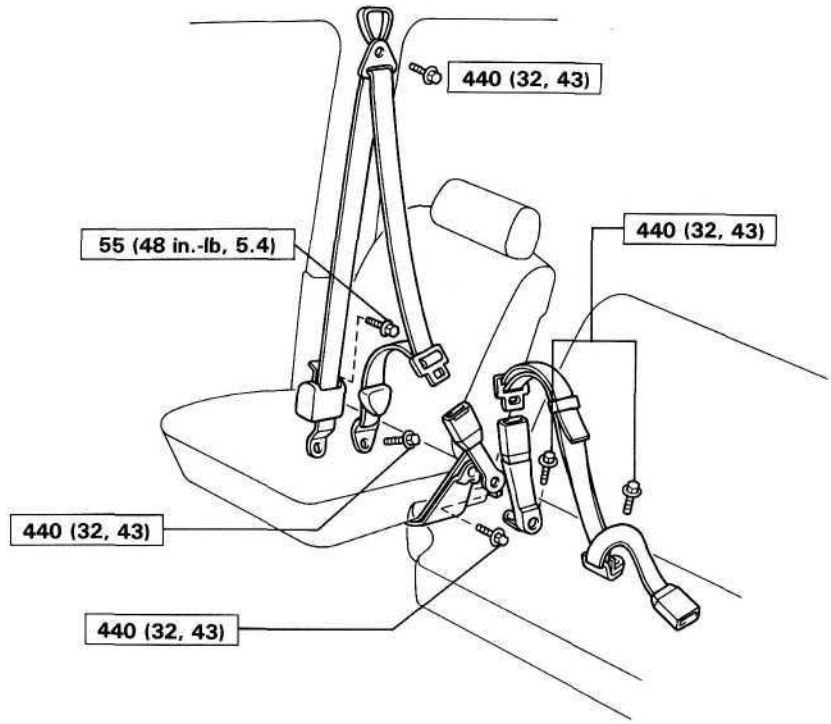

ELR and Manual Type
Separate and bench seat

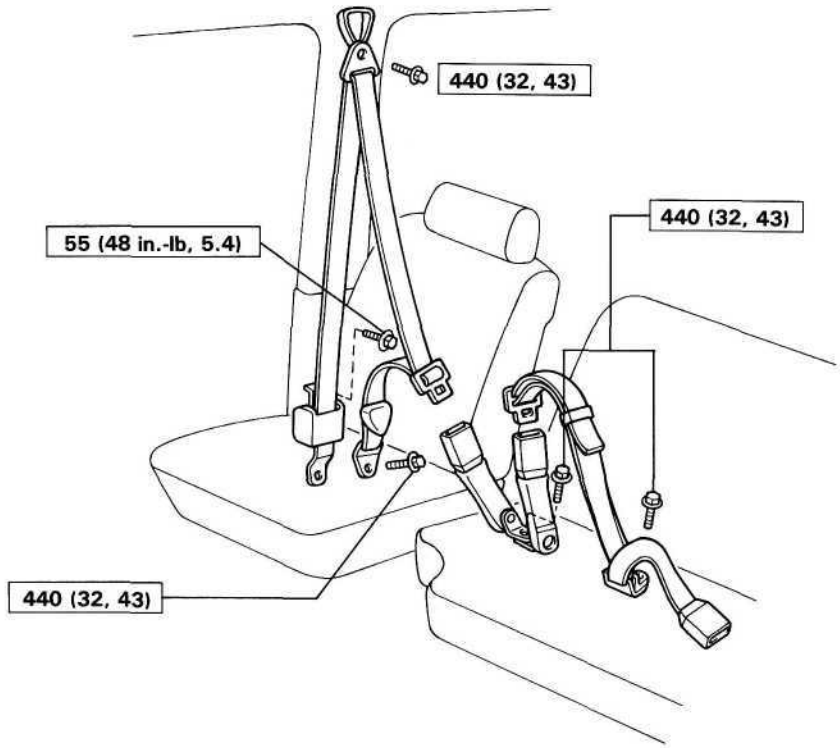

kg-cm (ft-lb, N·m) : Specified torque

BO5210
BO5214

COMPONENTS (Cont'd)

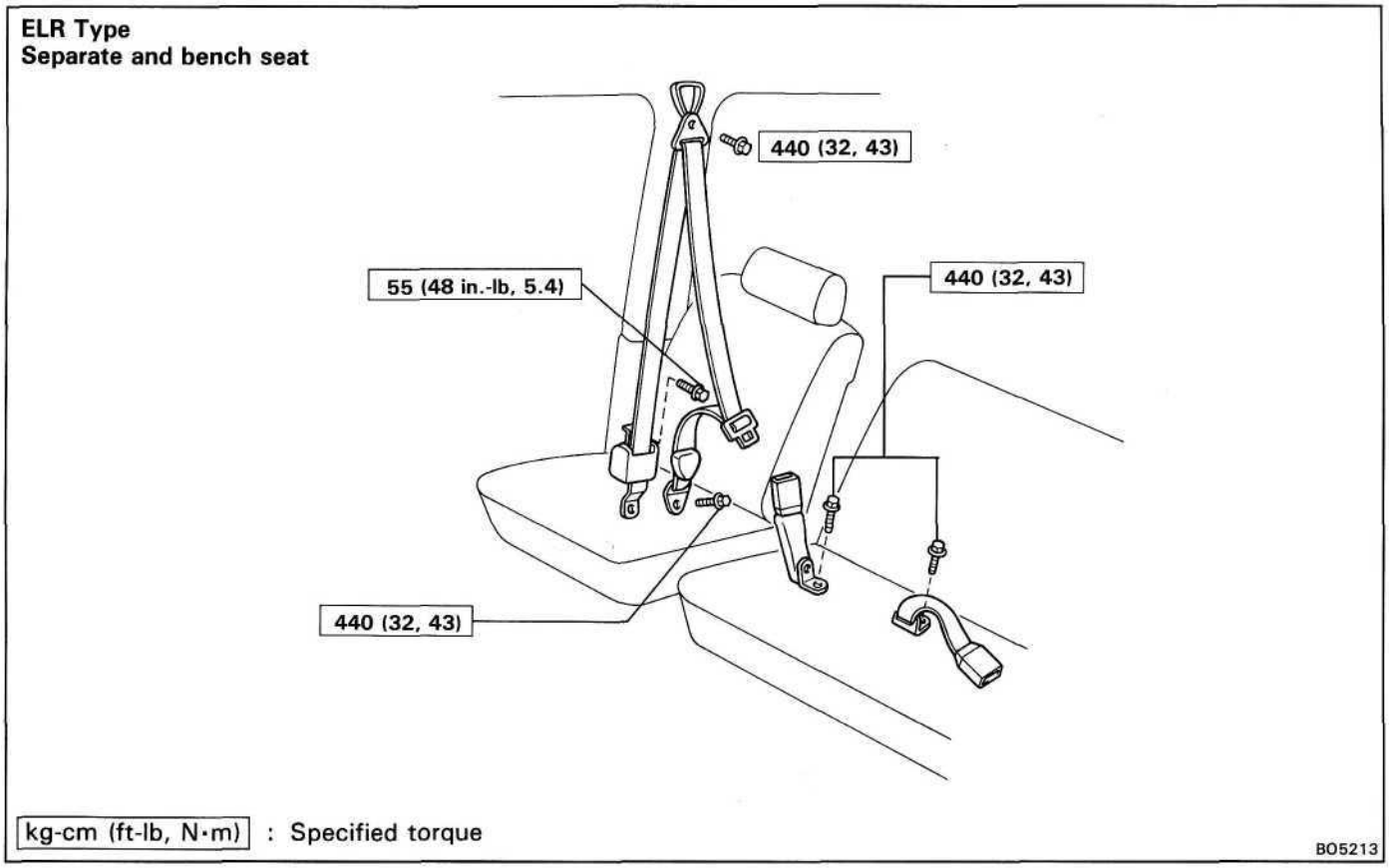

Second Seat Belts

COMPONENTS

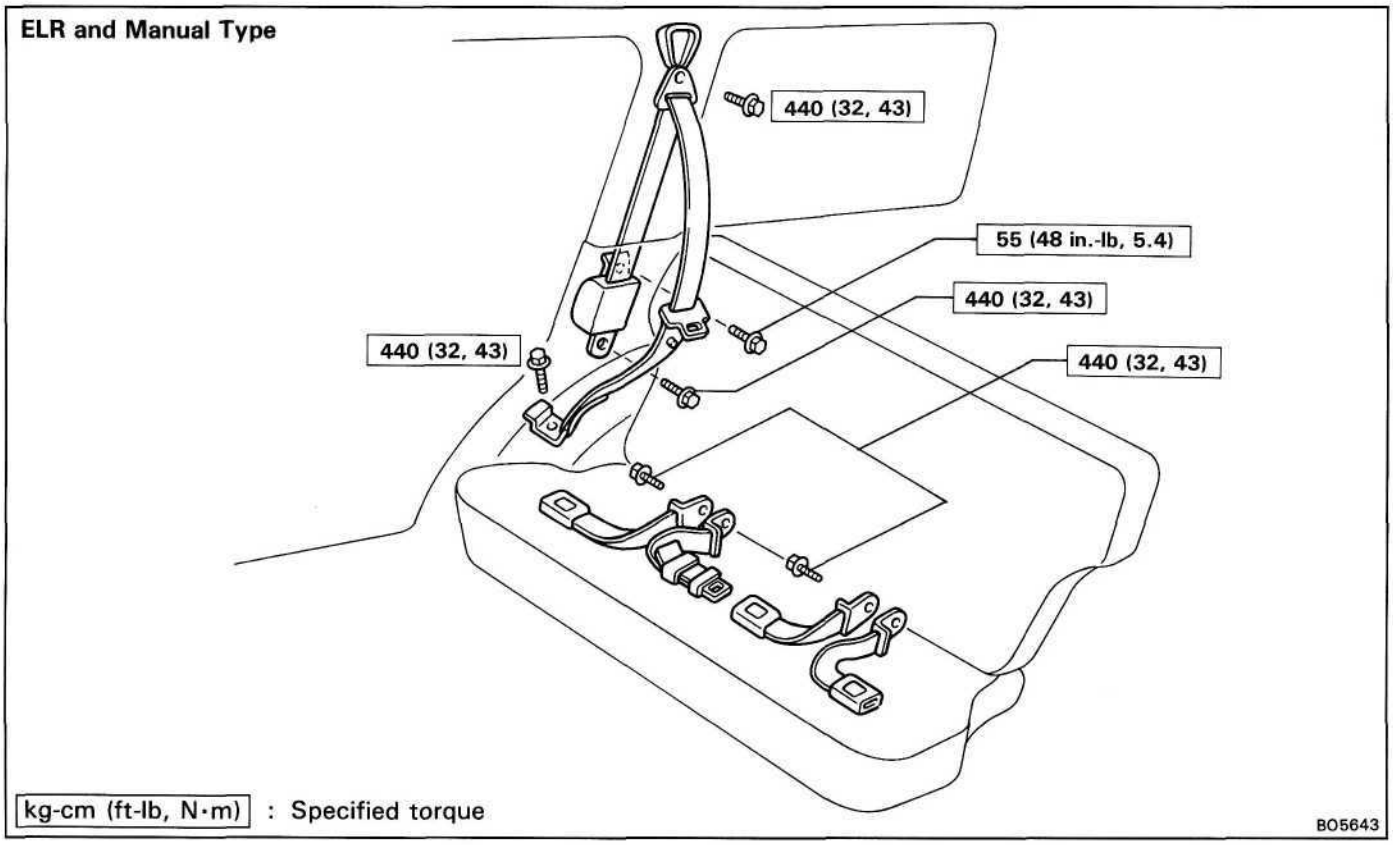

COMPONENTS (Cont'd)

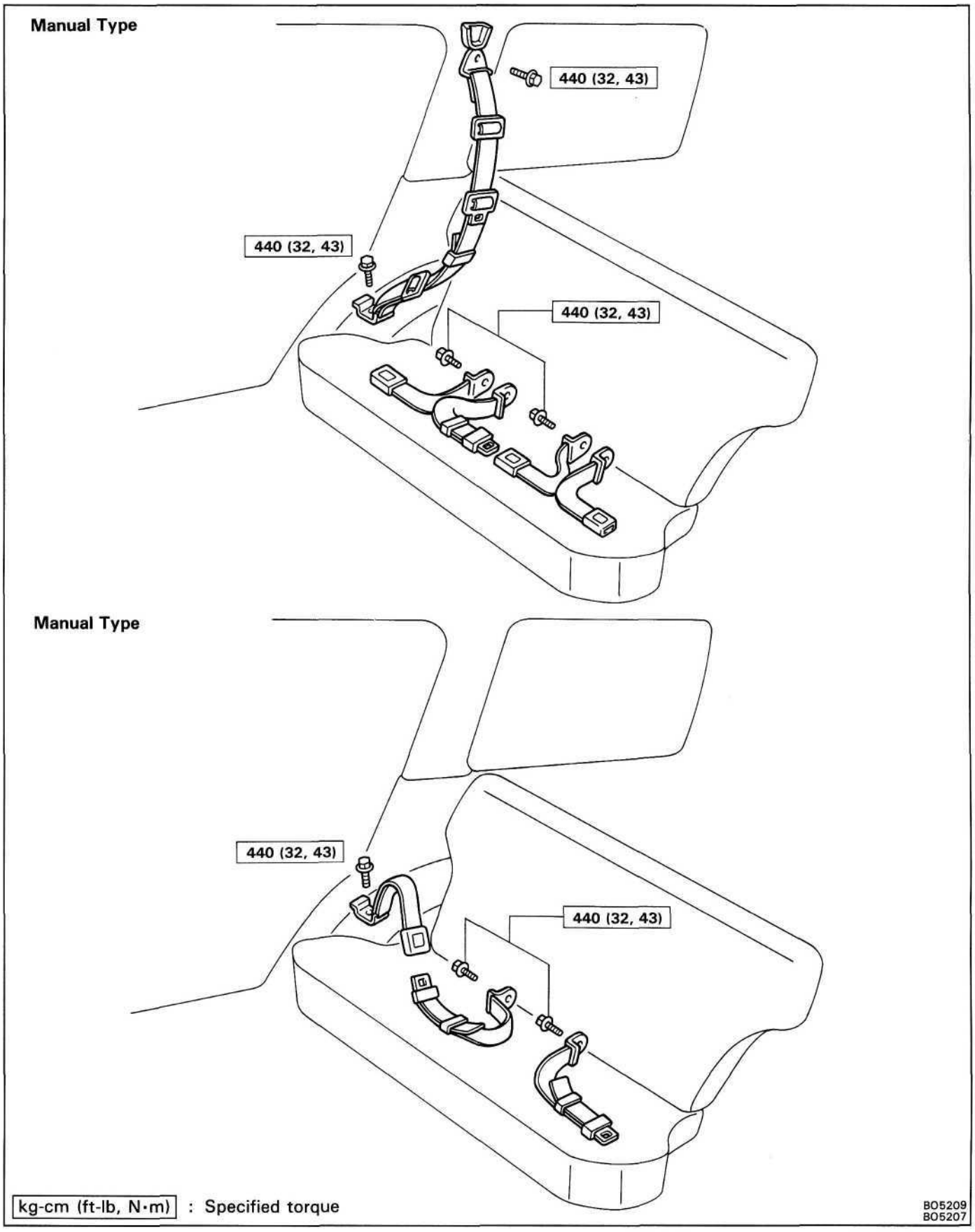

Third Seat Belts

COMPONENTS

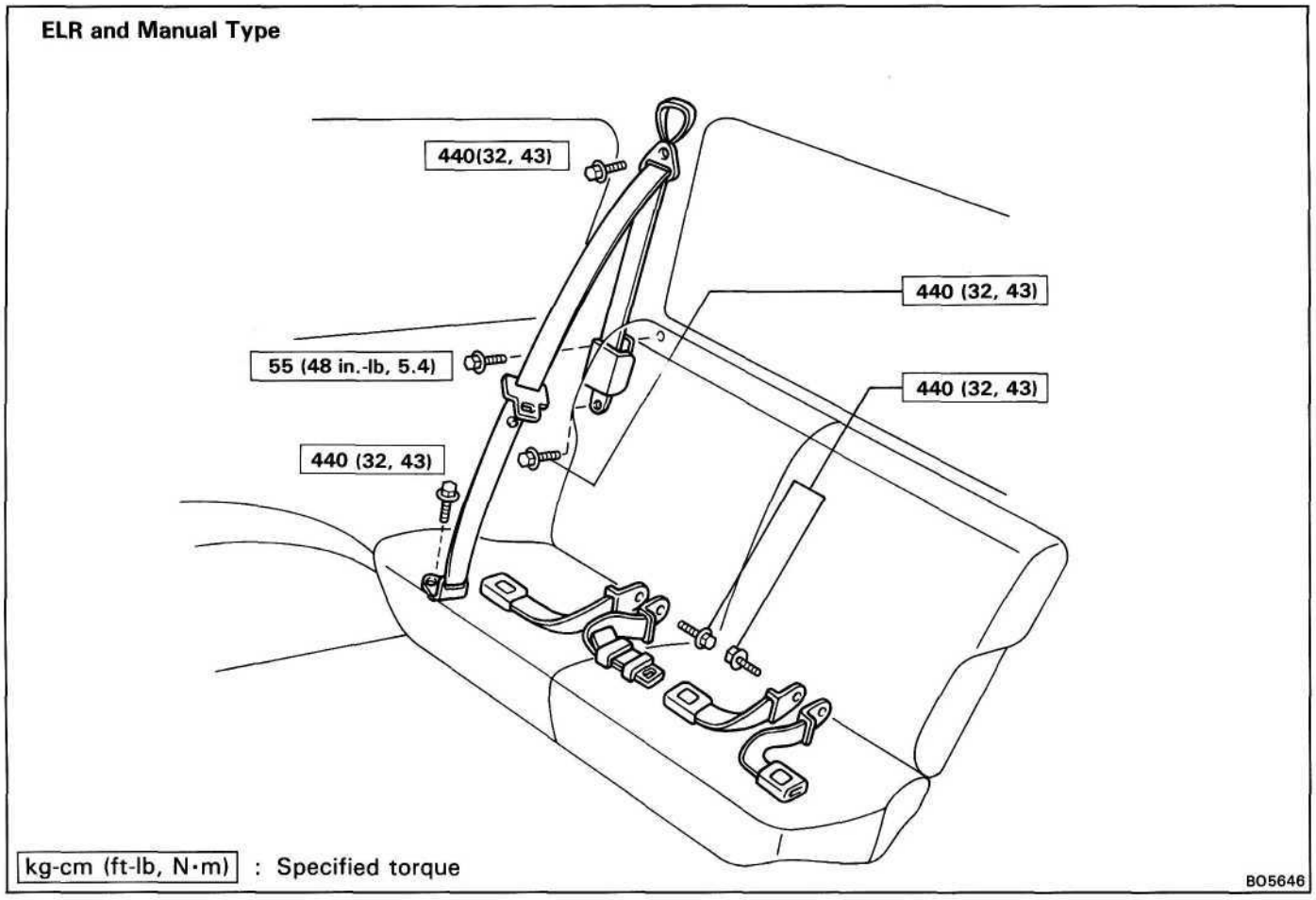

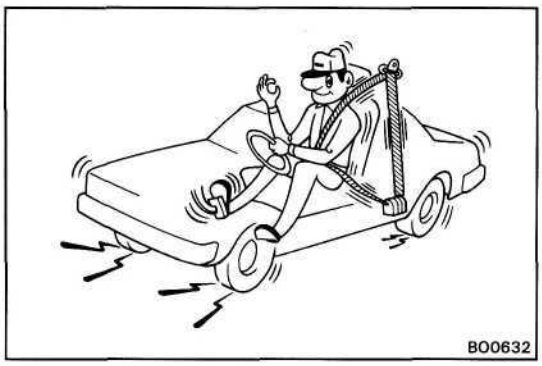

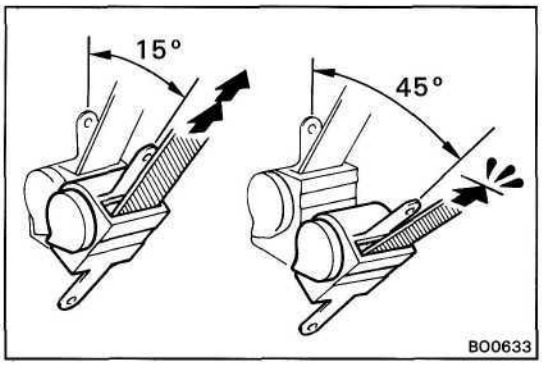

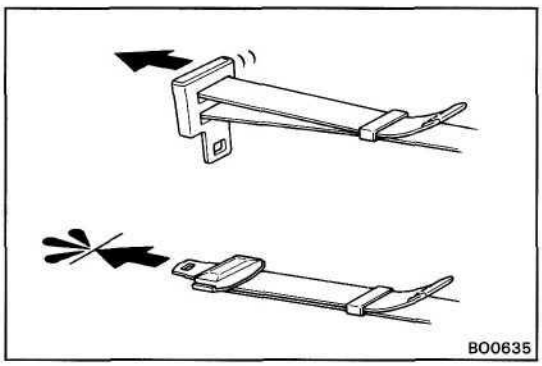

SEAT BELTS
[Emergency Locking Retractor (ELR) Type]

1. RUNNING TEST (IN SAFETY AREA)

(a) Fasten the seat belt.

(b) Drive the car at 10 mph (16 km/h) and make a very hard stop.

(c) Check that the seat belt is locked and cannot be extended at this time.

HINT: Conduct this test in safe area. If the belt does not lock, remove the belt mechanism assembly and conduct the following static check. Also, whenever installing a new belt assemly, verify the proper operation before installation.

2. STATIC TEST

(a) Remove the locking retractor assembly.

(b) Tilt the retractor slowly.

(c) Verify that the belt can be pulled out at a tilt of 1 5 degrees or less, and cannot be pulled out at over 45 degrees of tilt.

If a problem is found, replace the assembly.

(Manual Type)

TESTING

(a) Adjust the belt to the proper length.

(b) Apply a firm load to the belt.

(c) Verify that the belt does not extend.

ROOF CARRIER AND ROOF RACK

COMPONENTS

Roof Rack

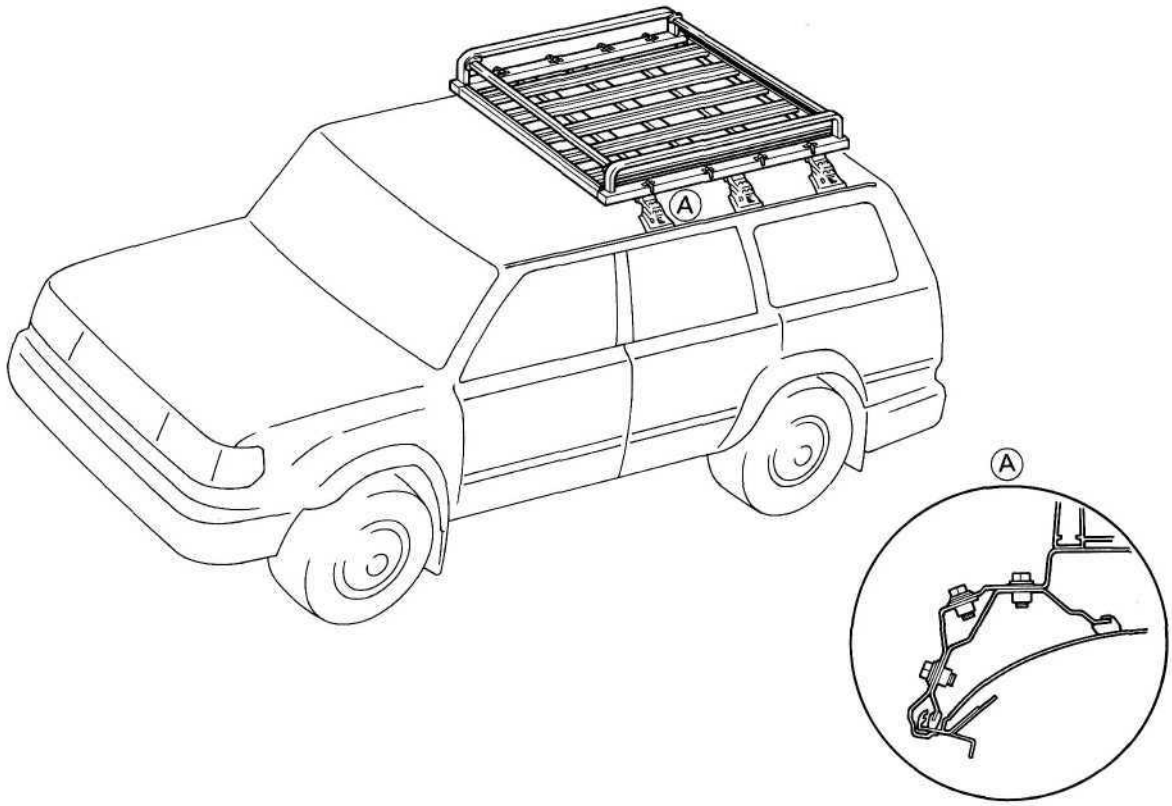

Roof Carrier

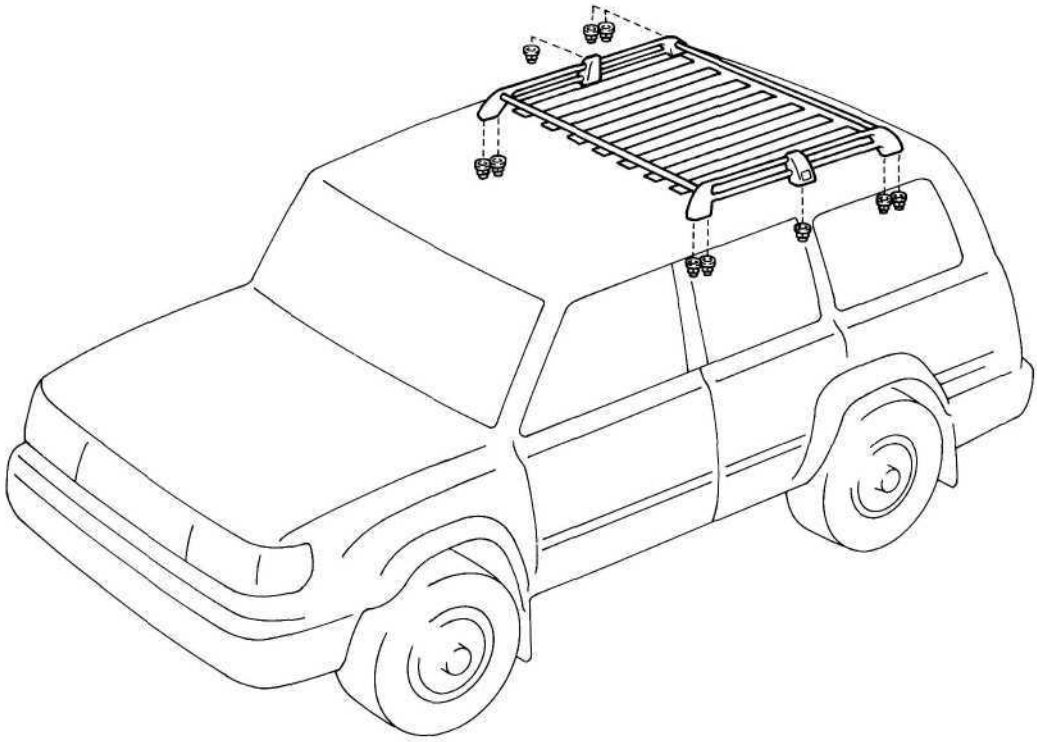

BO5205
BO5635

SIDE STEP

COMPONENTS

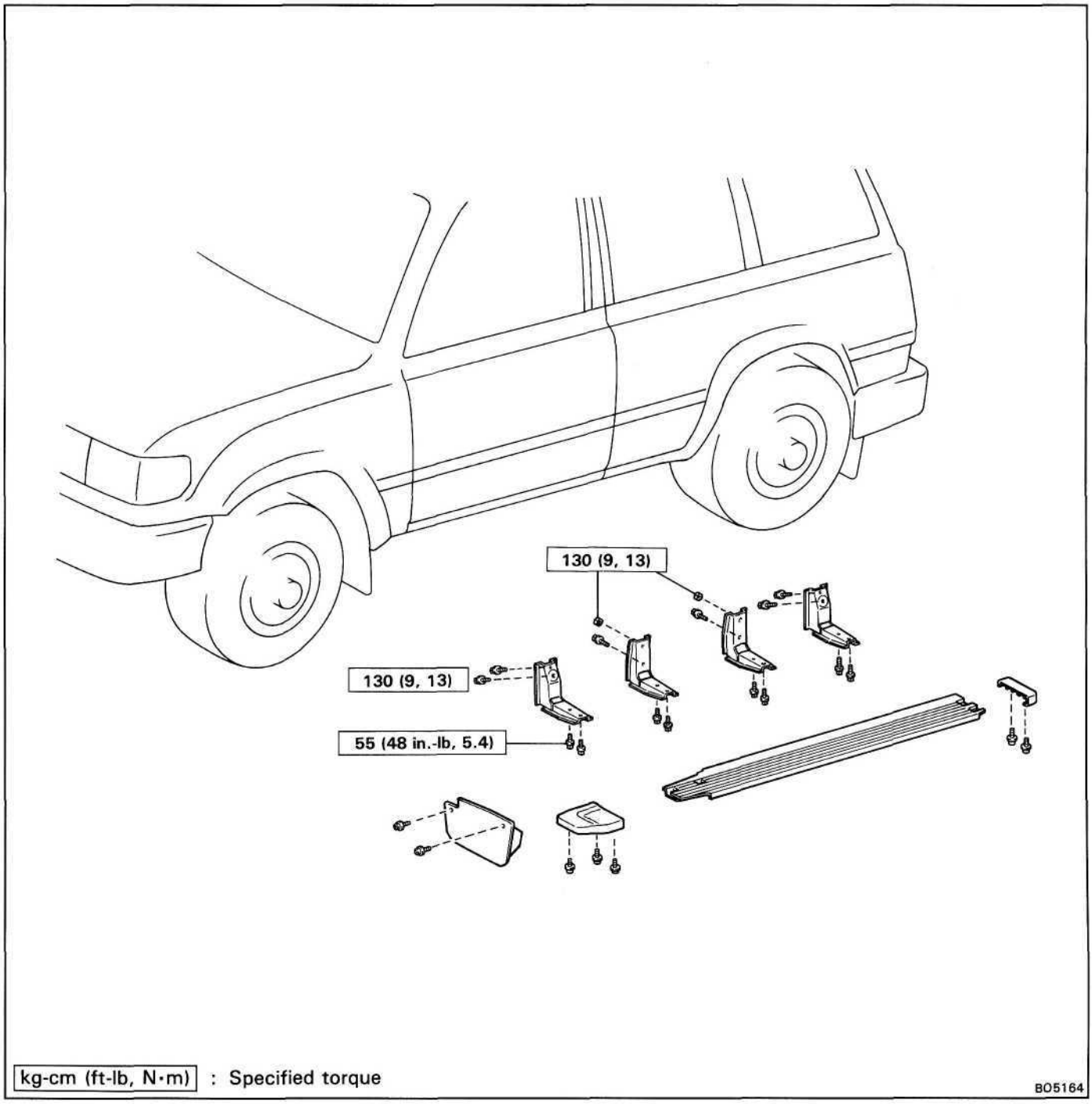

SPARE WHEEL CARRIER

COMPONENTS

Lif-up Door Type

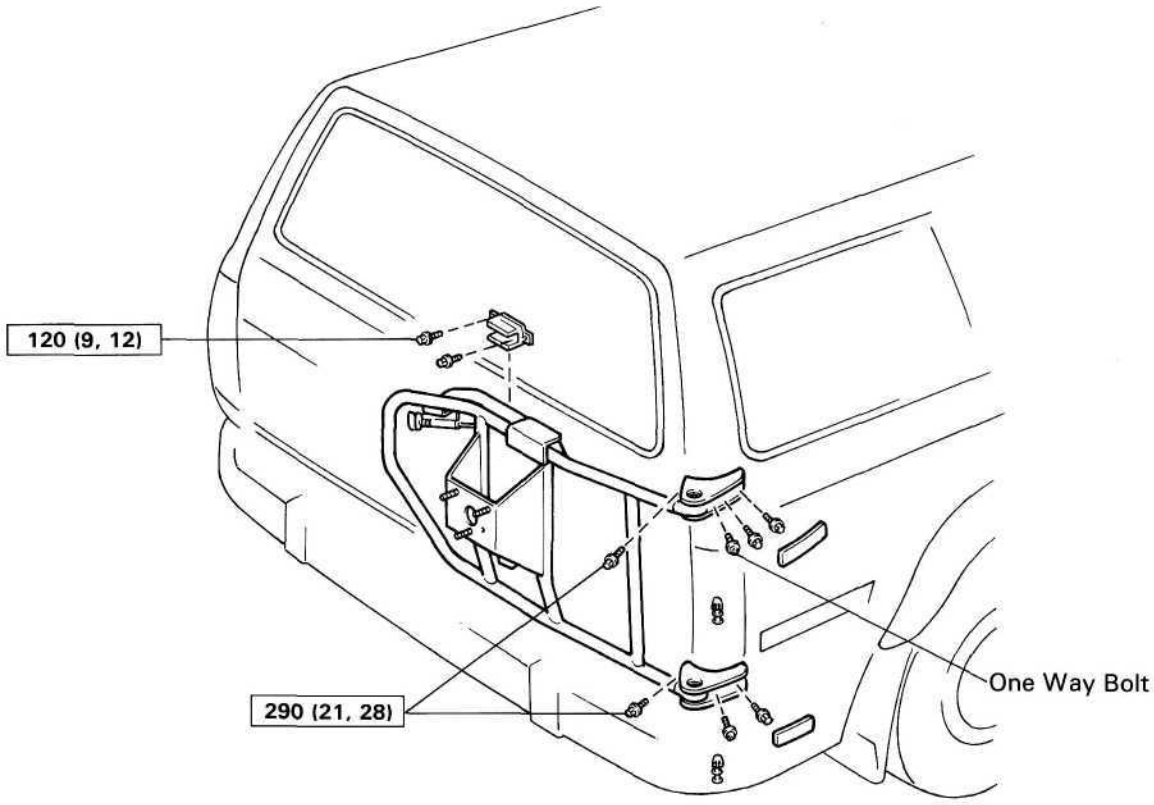

Swing Out Door Type

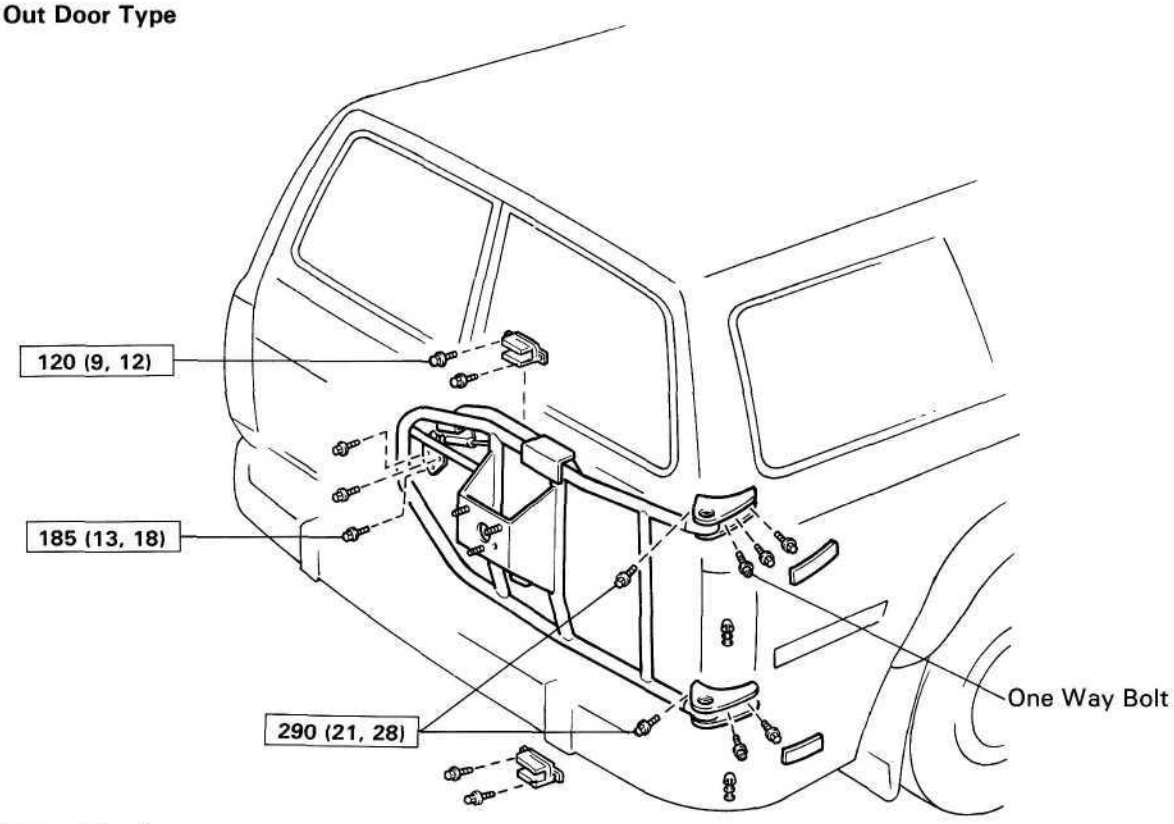

kg-cm (ft-lb, N·m) : Specified torque

BO5215

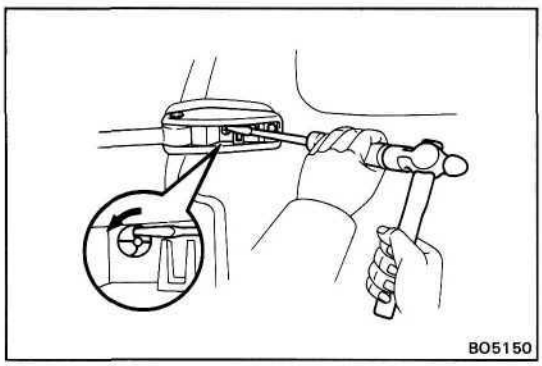

ONE WAY BOLT REMOVAL METHOD

Use a hammer to tap a screwdriver into the bolt grove at the perimeter, then turn the bolt anti-clockwise to remove it.

FUEL TANK AND LINE

COMPONENTS

(w/o Sub Fuel Tank)

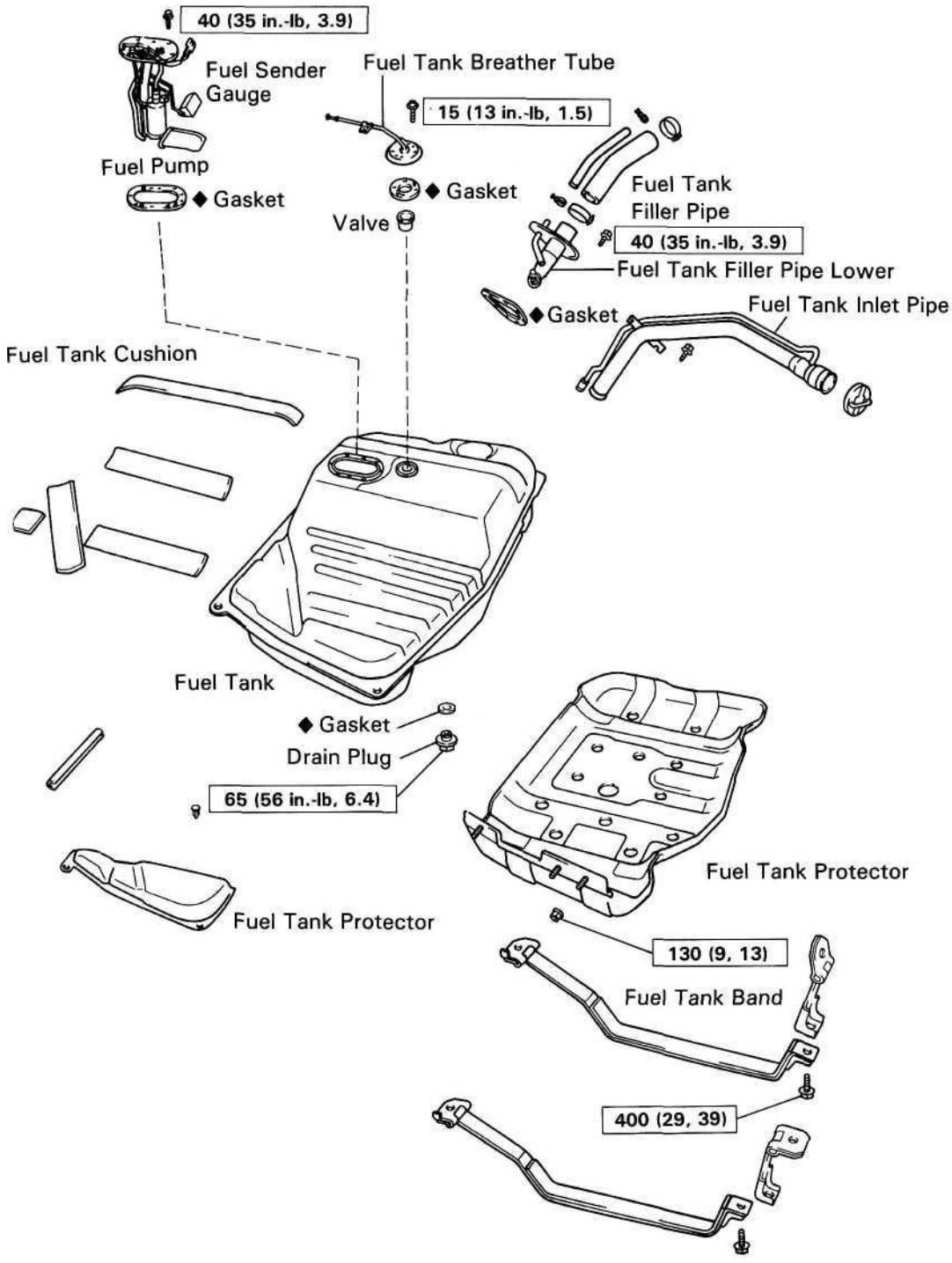

kg-cm (ft-lb, N·m) : Specified torque

◆ Non-reusable part

BO5650

COMPONETS (Cont'd)

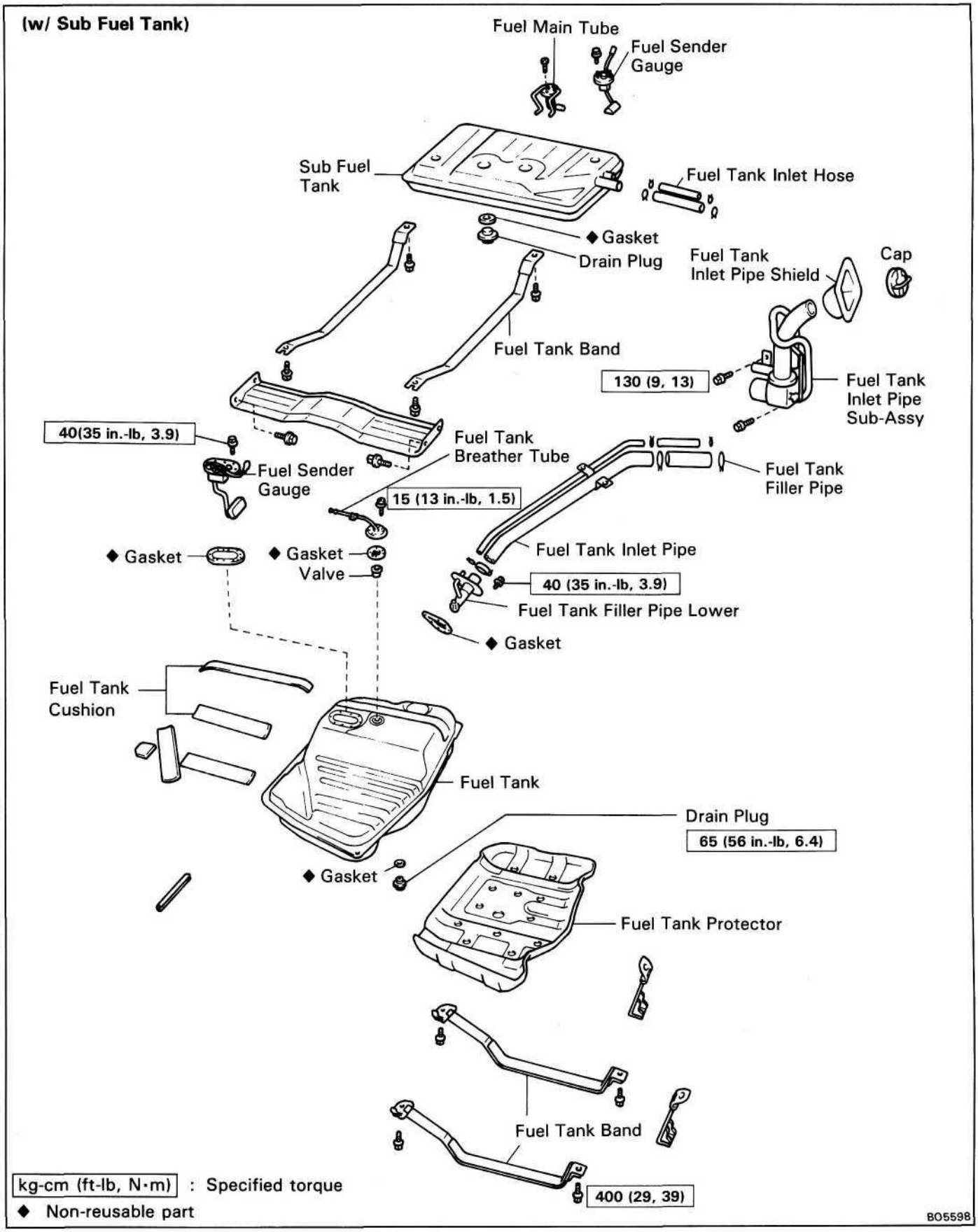

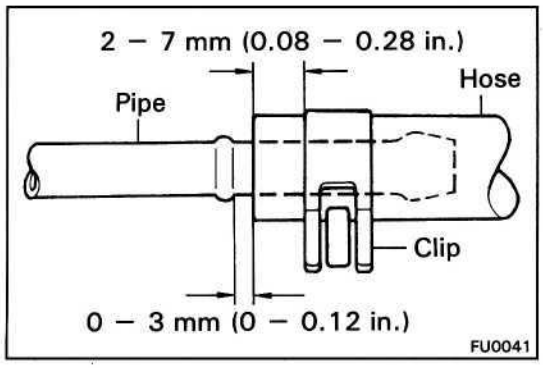

PRECAUTIONS

1. **Always use new gaskets when replacing the fuel tank or component parts.**

2. **Apply the proper torque to all tightening parts.**

INSPECT FUEL LINES AND CONNECTIONS

(a) Inspect the fuel lines and connections for cracks, leakage or deformation.

(b) Inspect the fuel tank vapor vent system hoses and connections for looseness, kinks or damage.

(c) Inspect the fuel tank for deformation, cracks, fuel leakage or tank mount bolts looseness.

(d) Inspect the filler neck for damage or fuel leakage.

(e) Hose and tube connections are as shown in the illustration.

If problem is found, repair or replace the parts as necessary.

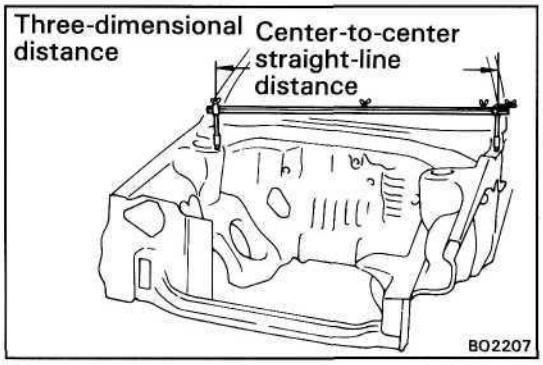

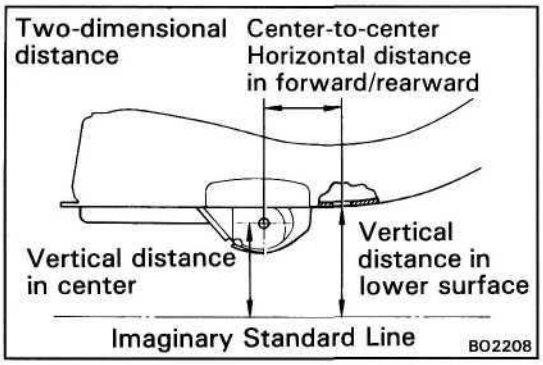

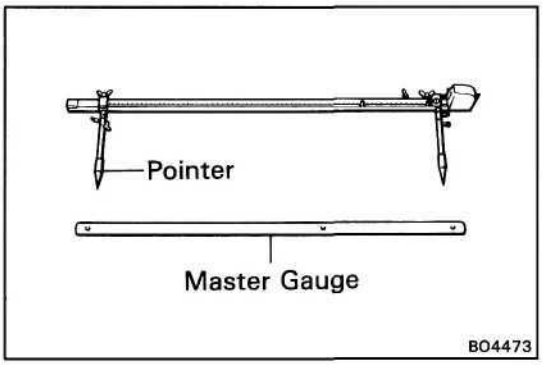

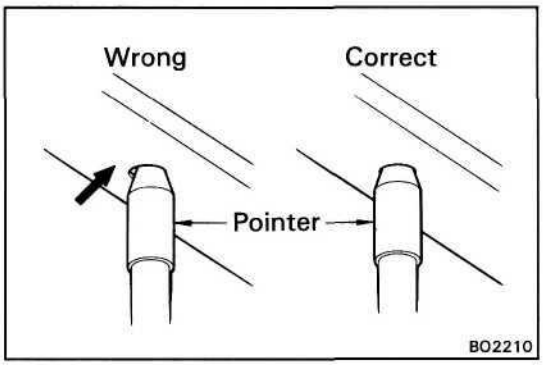

FRAME DIMENSIONS

General Information

1. BASIC DIMENSIONS

(a) There are two types of dimensions in the diagram.

(Three-dimensional distance)

- Straight-line distance between the centers of two measuring points.

(Two-dimensional distance)

- Horizontal distance in forward/rearward between the centers of two measuring points.
- The height from an imaginary standard line.

(b) In cases in which only one dimension is given, left and right are symmetrical.

(c) The dimensions in the following drawing indicate actual distance. Therefore, please use the dimensions as a reference.

2. MEASURING

(a) Basically, all measurements are to be done with a tracking gauge. For portions where it is not possible to use a tracking gauge, a tape measure should be used.

(b) Use only a tracking gauge that has no looseness in the body, measuring plate, or pointers.

HINT:

1. The height of the left and right pointers must be equal.
2. Always calibrate the tracking gauge before measuring or after adjusting the pointer height.
3. Take care not to drop the tracking gauge or otherwise shock it.
4. Confirm that the pointers are securely in the holes.

Frame Dimensions

THREE-DIMENSIONAL DISTANCE

mm (in.)

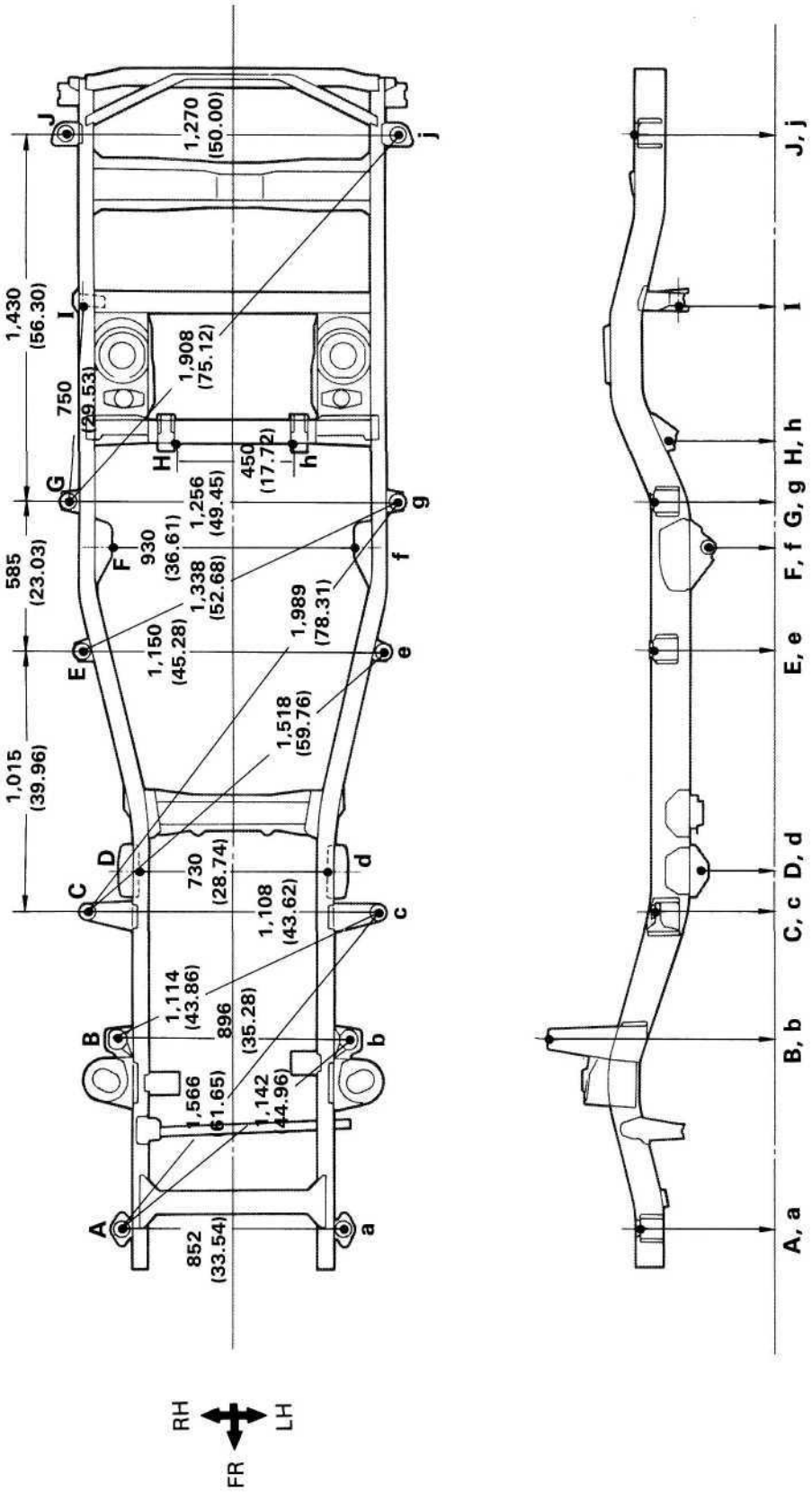

BO5177

Symbol	Name	Hole dia.	Symbol	Name	Hole dia.
A, a	Body mounting hole	60 (2.36)	F, f	Lower control link installation hole	18.5 (0.73)
B, b	Shock absorber installation hole	24 (0.94)	G, g	Body mounting hole	24 (0.94)
C, c	Body mounting hole	28 (1.10)	H, h	Upper control arm installation hole	18.5 (0.728)
D, d	Leading arm installation hole	18.5 (0.728)	I	Lateral control rod installation hole	18.5 (0.728)
E, e	Body mounting hole	24 (0.94)	J, j	Body mounting hole	60 (2.36)

TWO-DIMENSIONAL DISTANCE

Wheel base 2,850 (112.20)

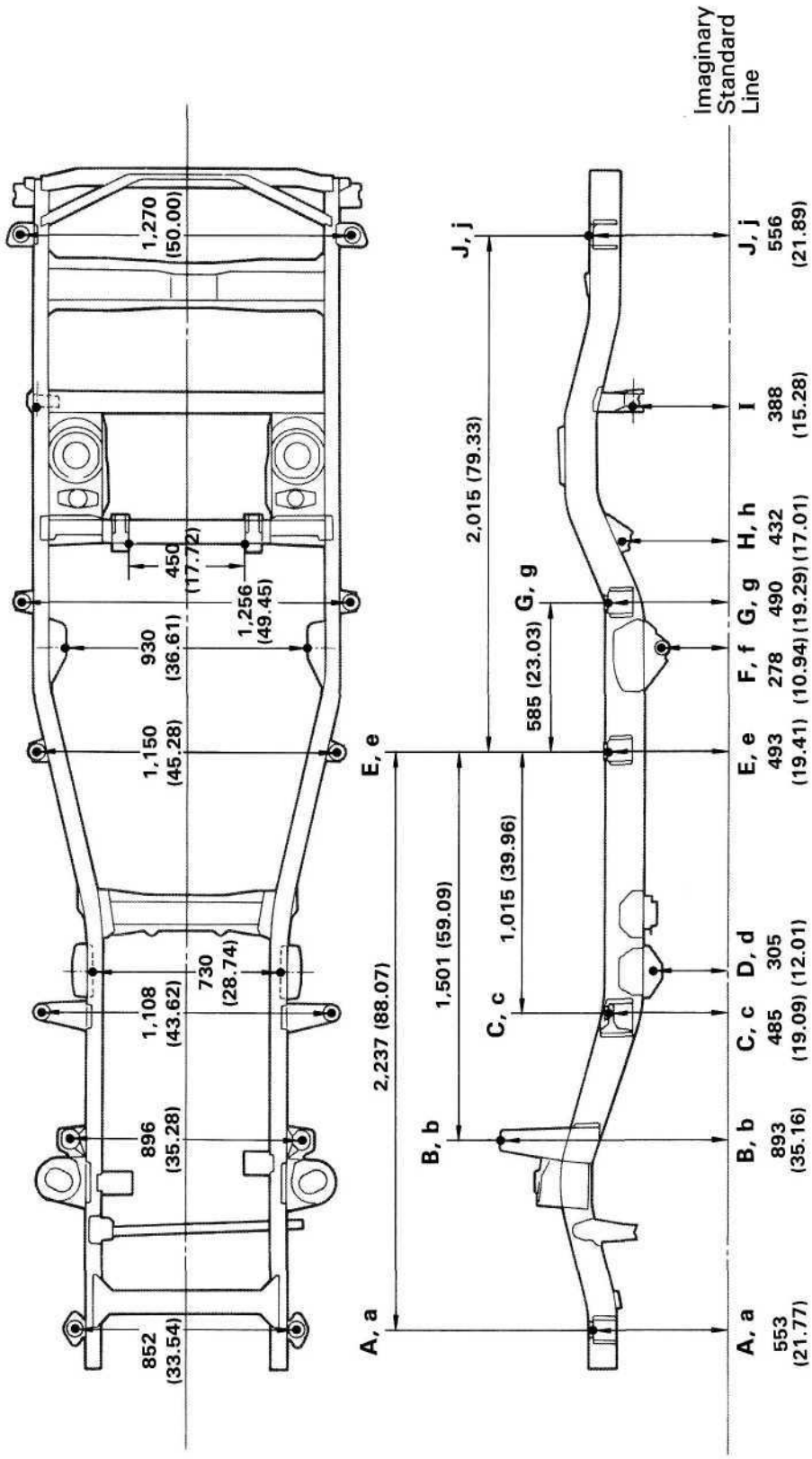

mm (in.)

Symbol	Name	Hole dia.
A, a	Body mounting hole	60 (2.36)
B, b	Shock absorber installation hole	24 (0.94)
C, c	Body mounting hole	28 (1.10)
D, d	Leading arm installation hole	18.5 (0.728)
E, e	Body mounting hole	24 (0.94)

Symbol	Name	Hole dia.
F, f	Lower control link installation hole	18.5 (0.73)
G, g	Body mounting hole	24 (0.94)
H, h	Upper control arm installation hole	18.5 (0.728)
I	Lateral control rod installation hole	18.5 (0.728)
J, j	Body mounting hole	60 (2.36)

BO5177